Lecture 15 / 16:

Cameras & Lenses

Computer Graphics and Imaging
UC Berkeley CS184/284A

Rendering with Realistic Camera Model

Credit: Bertrand Benoit. “Sweet Feast,” 2009. [Blender /VRay]

Rendering with Realistic Camera Model

Credit: Giuseppe Albergo. “Colibri” [Blender]

Image Capture Overview

What's Happening Inside the Camera?

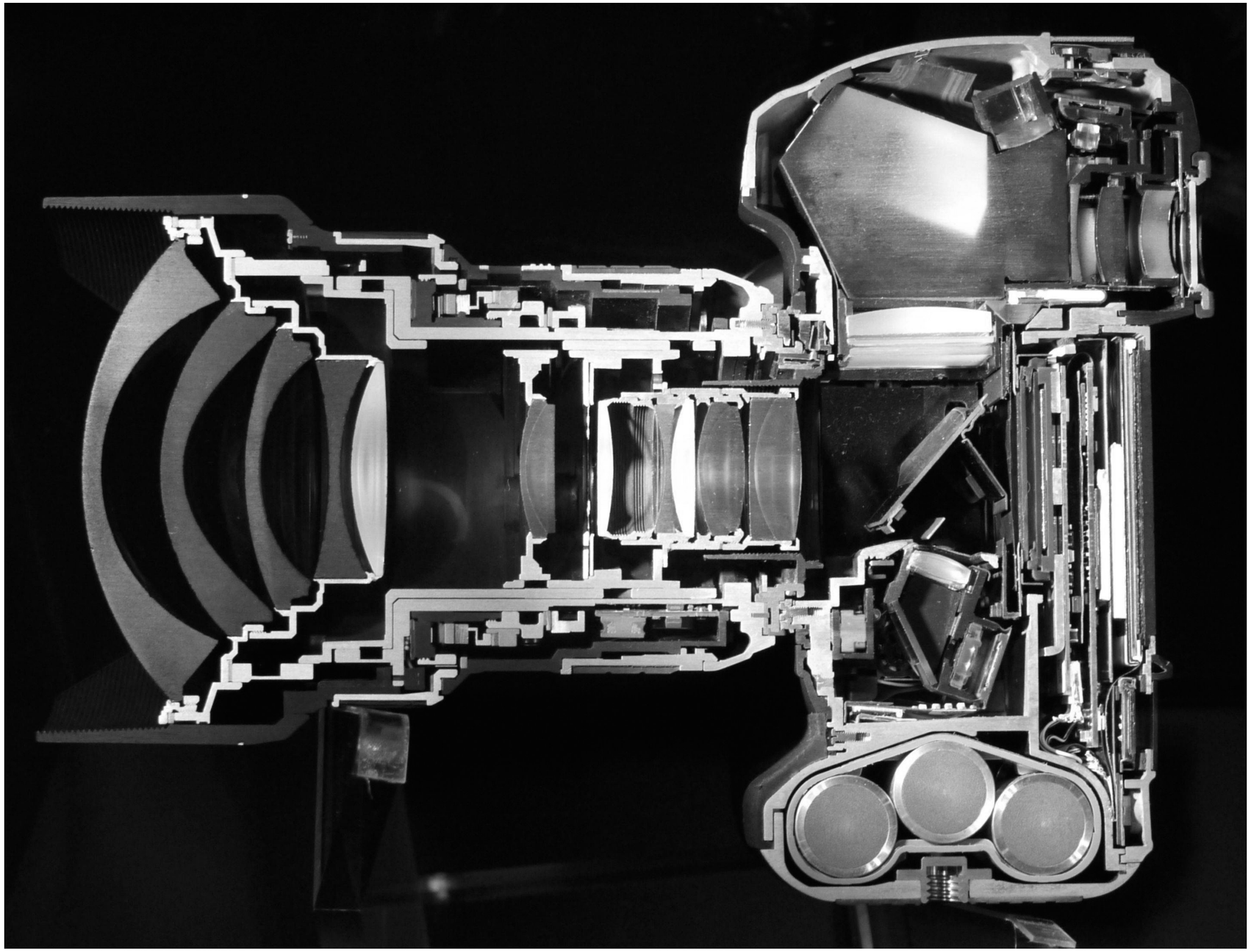

Cross-section of Nikon D3, 14-24mm F2.8 lens

Pinholes & Lenses Form Image on Sensor

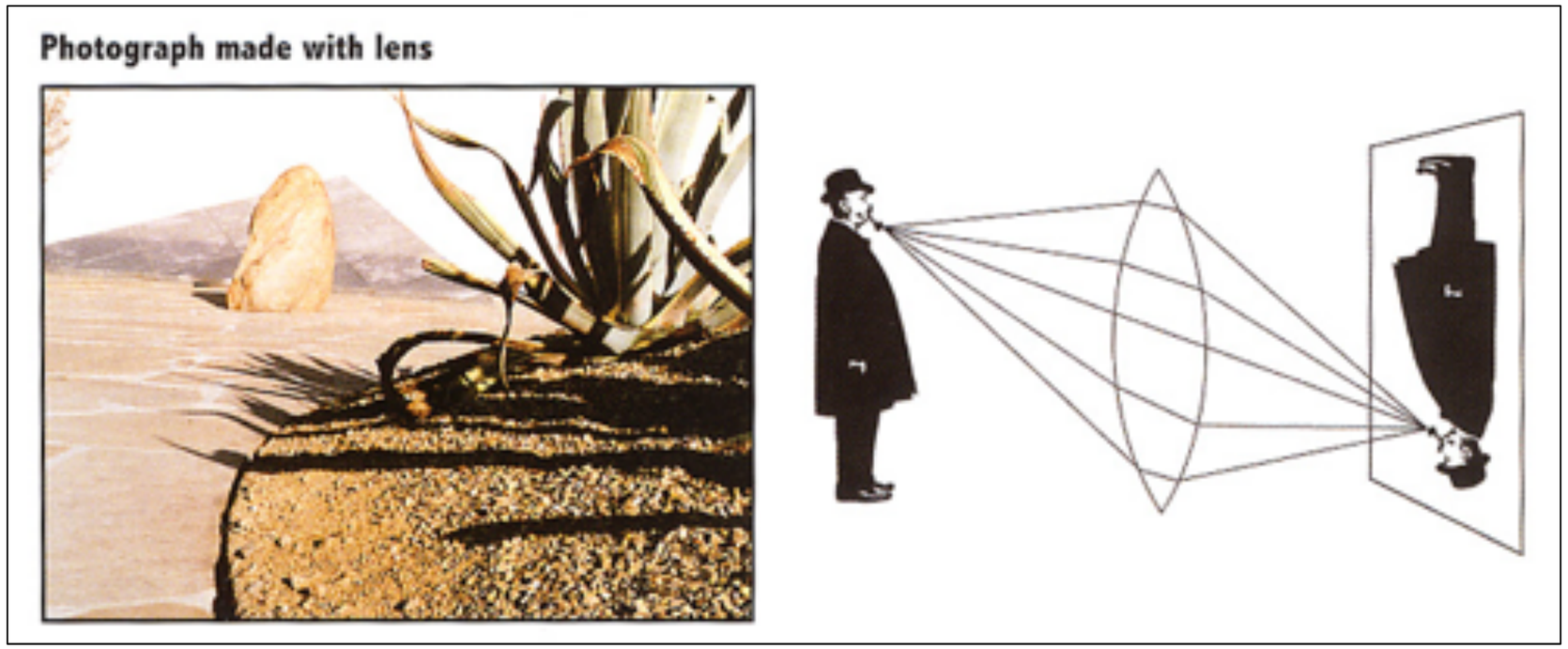

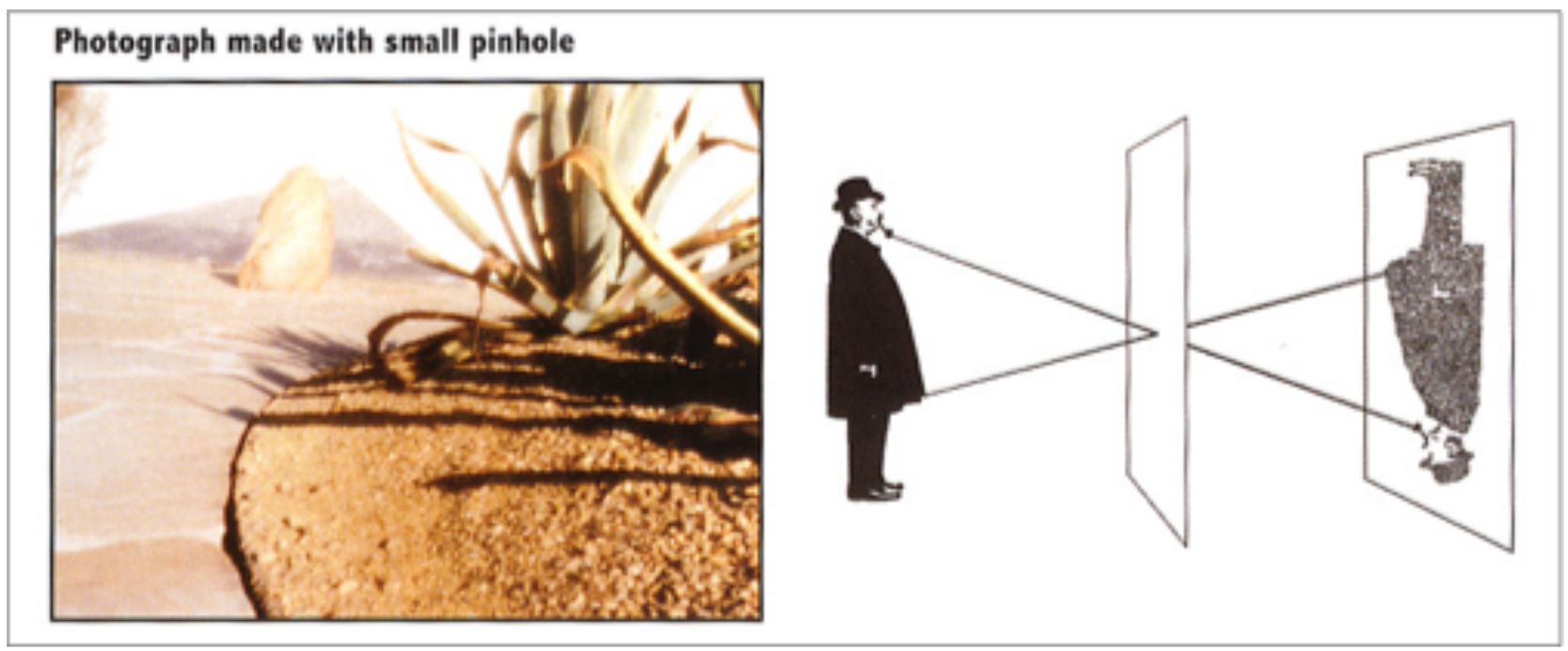

London and Upton

Shutter Exposes Sensor For Precise Duration

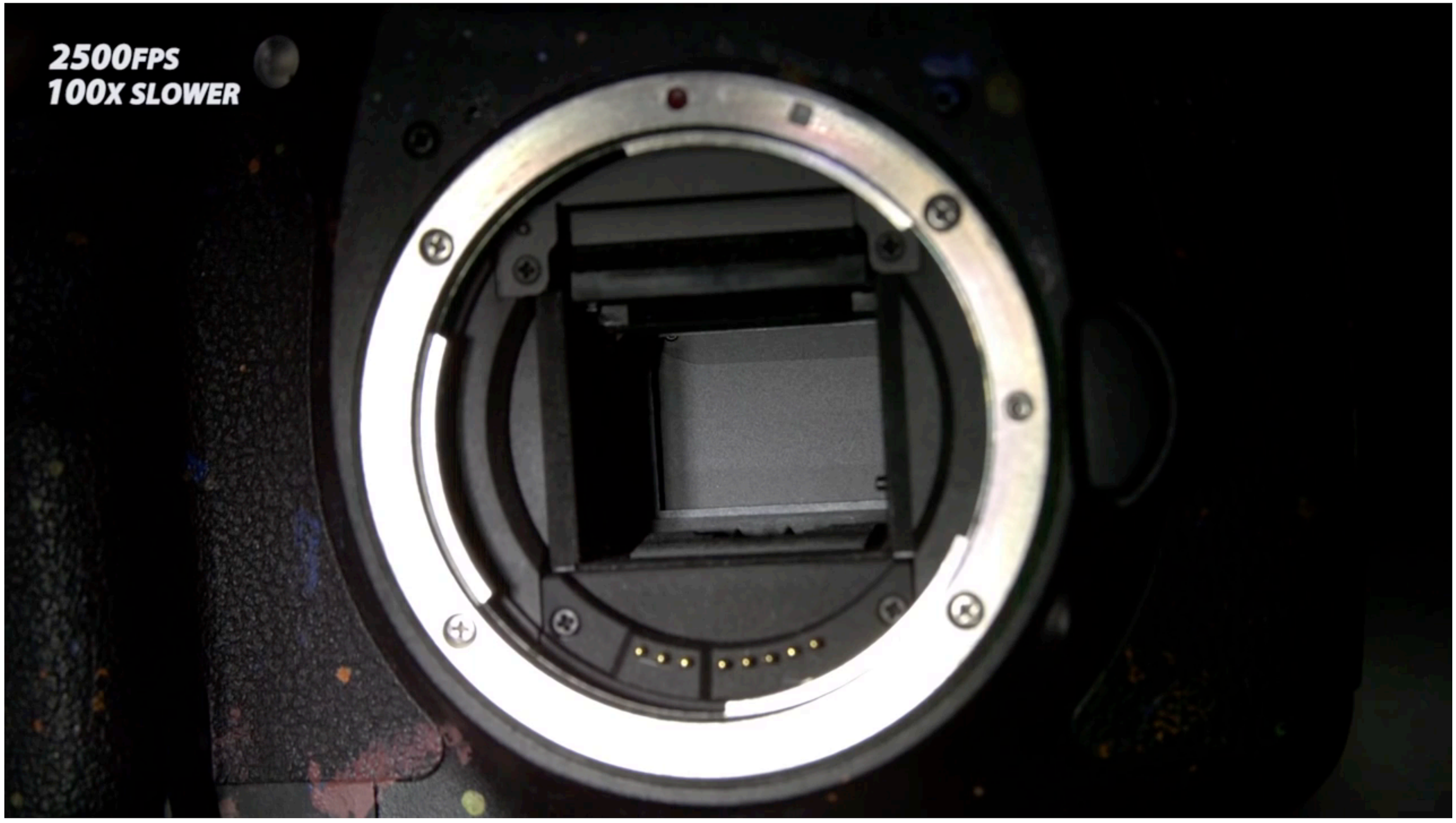

The Slow Mo Guys, https://youtu.be/CmjeCchGRQo

Sensor Accumulates Irradiance During Exposure

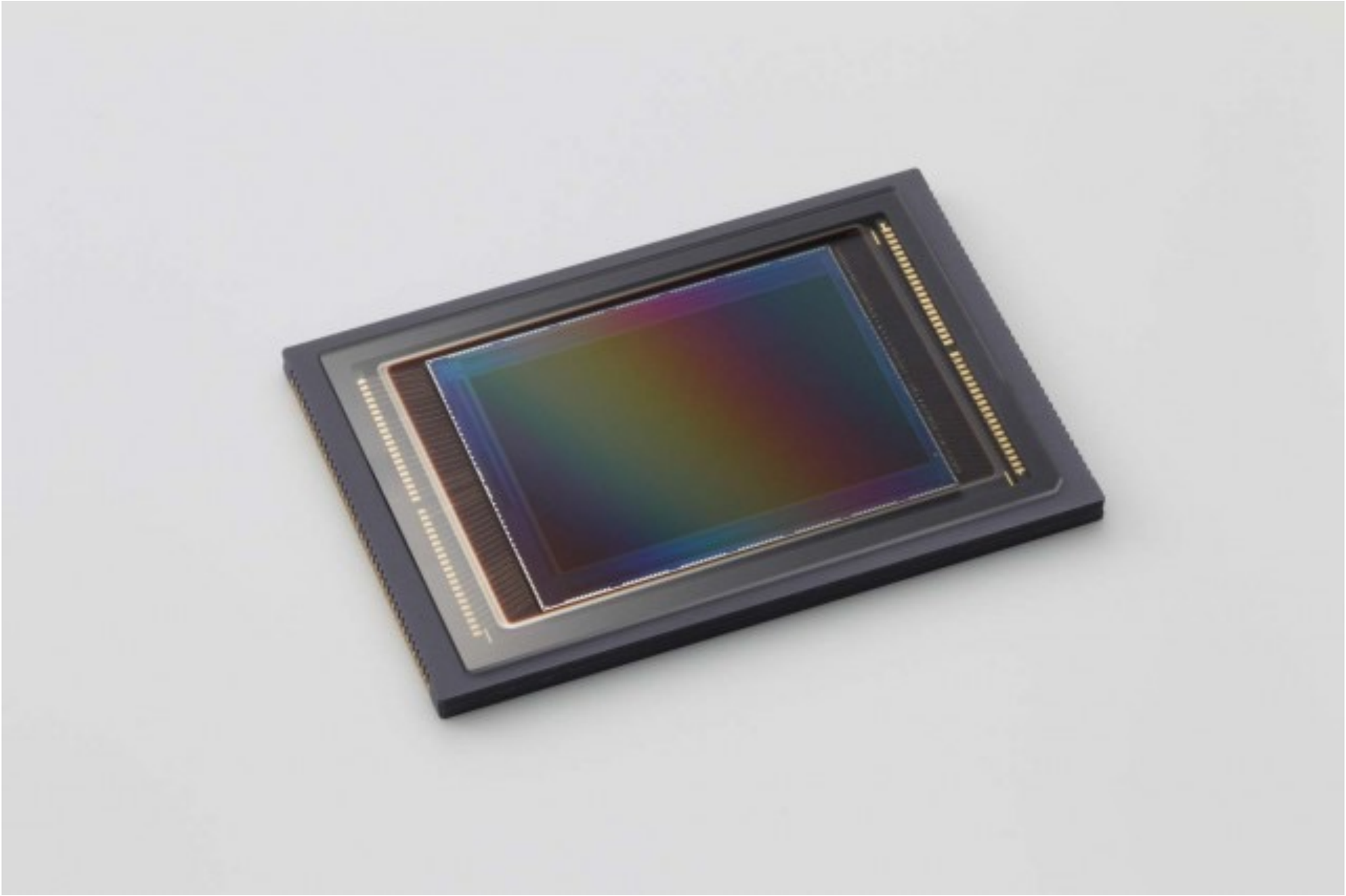

Image Processing: From Sensor Values to Image

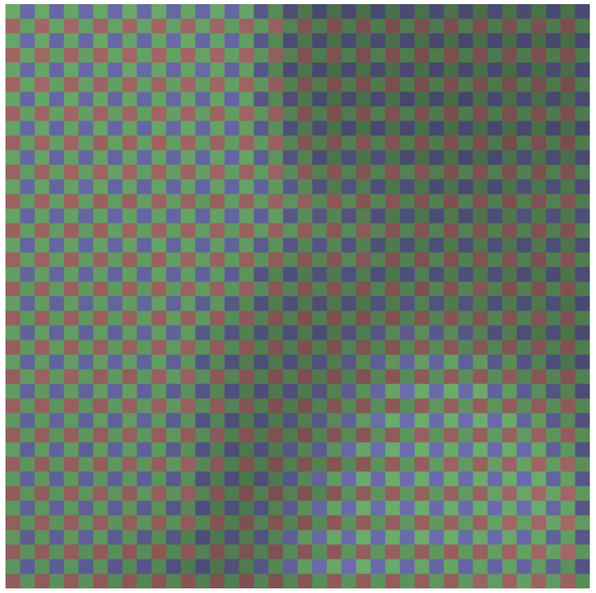

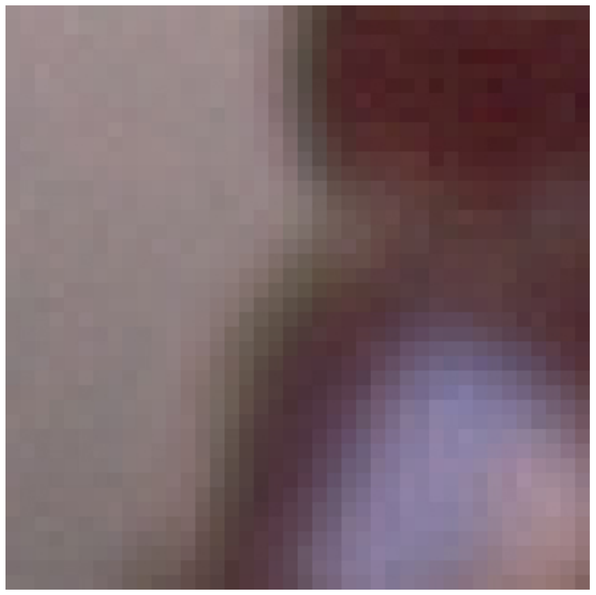

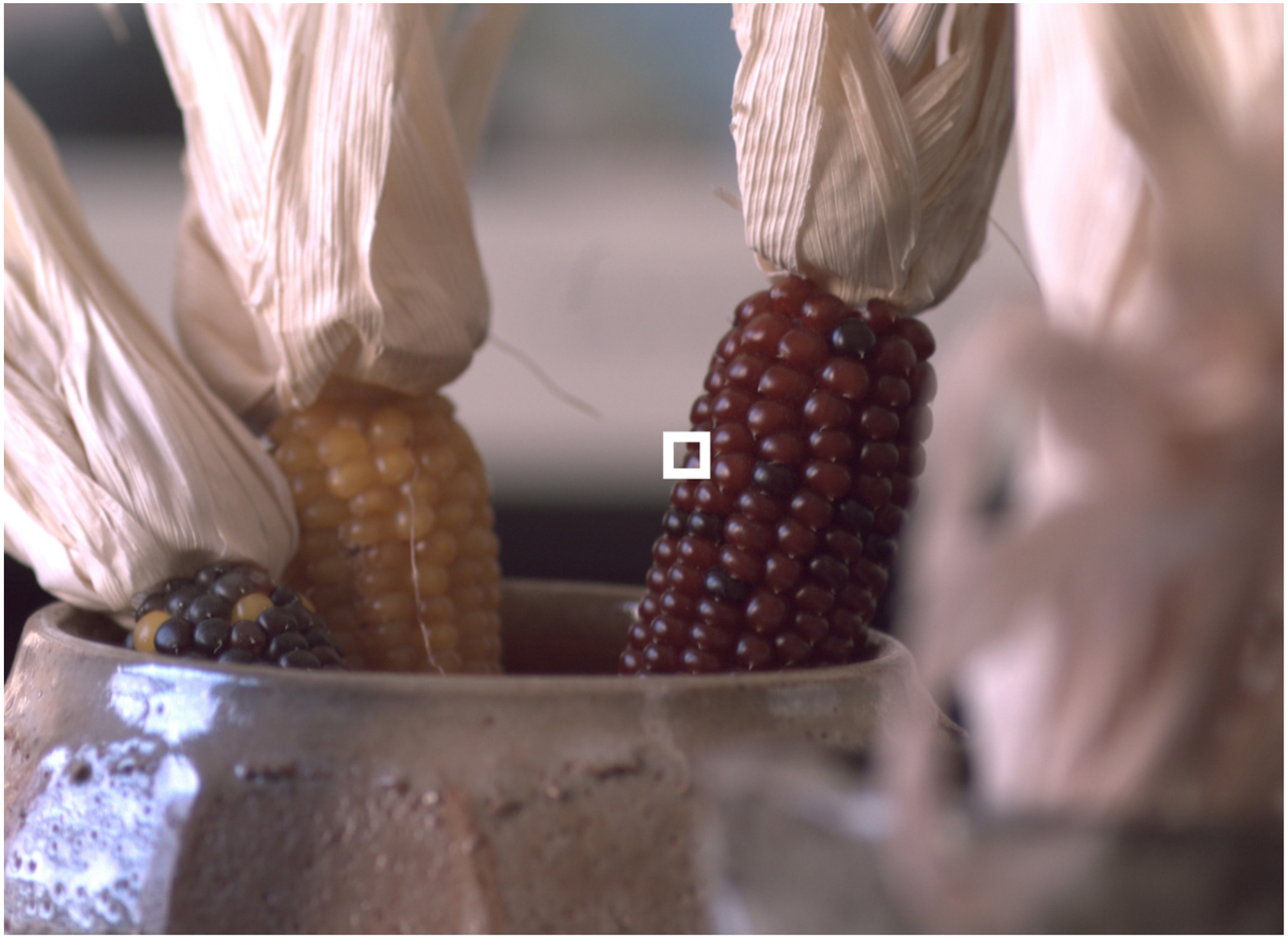

Optics of Image Formation: Field of View

Effect of Focal Length on FOV

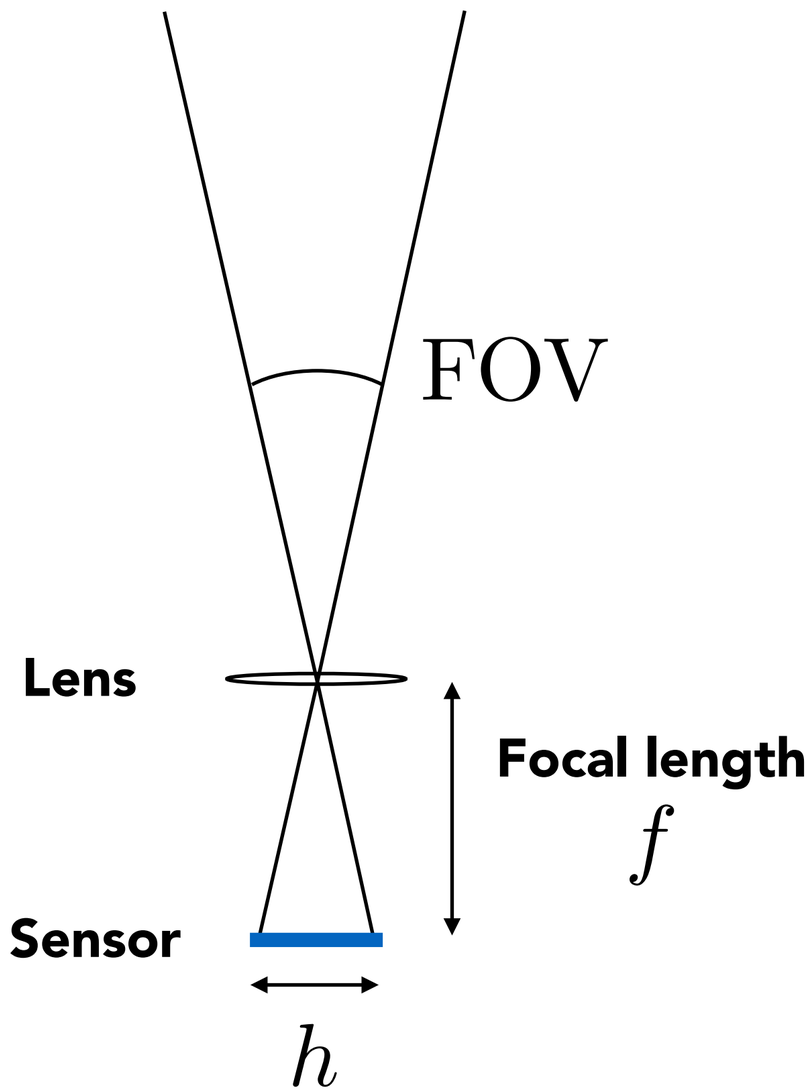

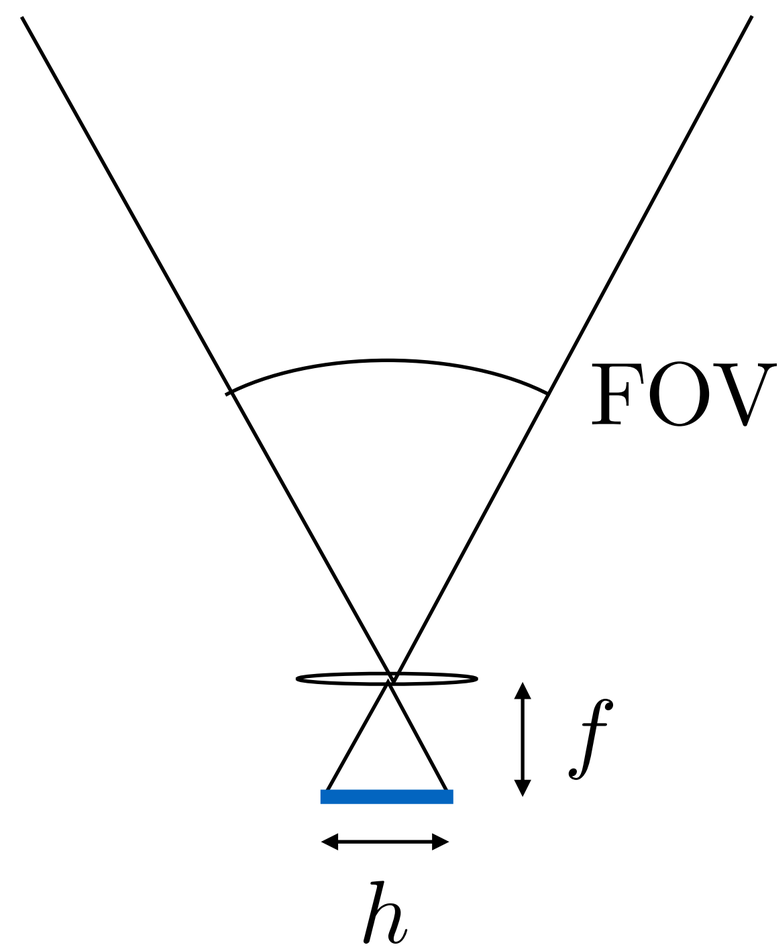

For a fixed sensor size, decreasing the focal length increases the field of view.

$$\mathrm{FOV} = 2\,\arctan\left(\frac{h}{2f}\right)$$

Effect of Sensor Size on FOV

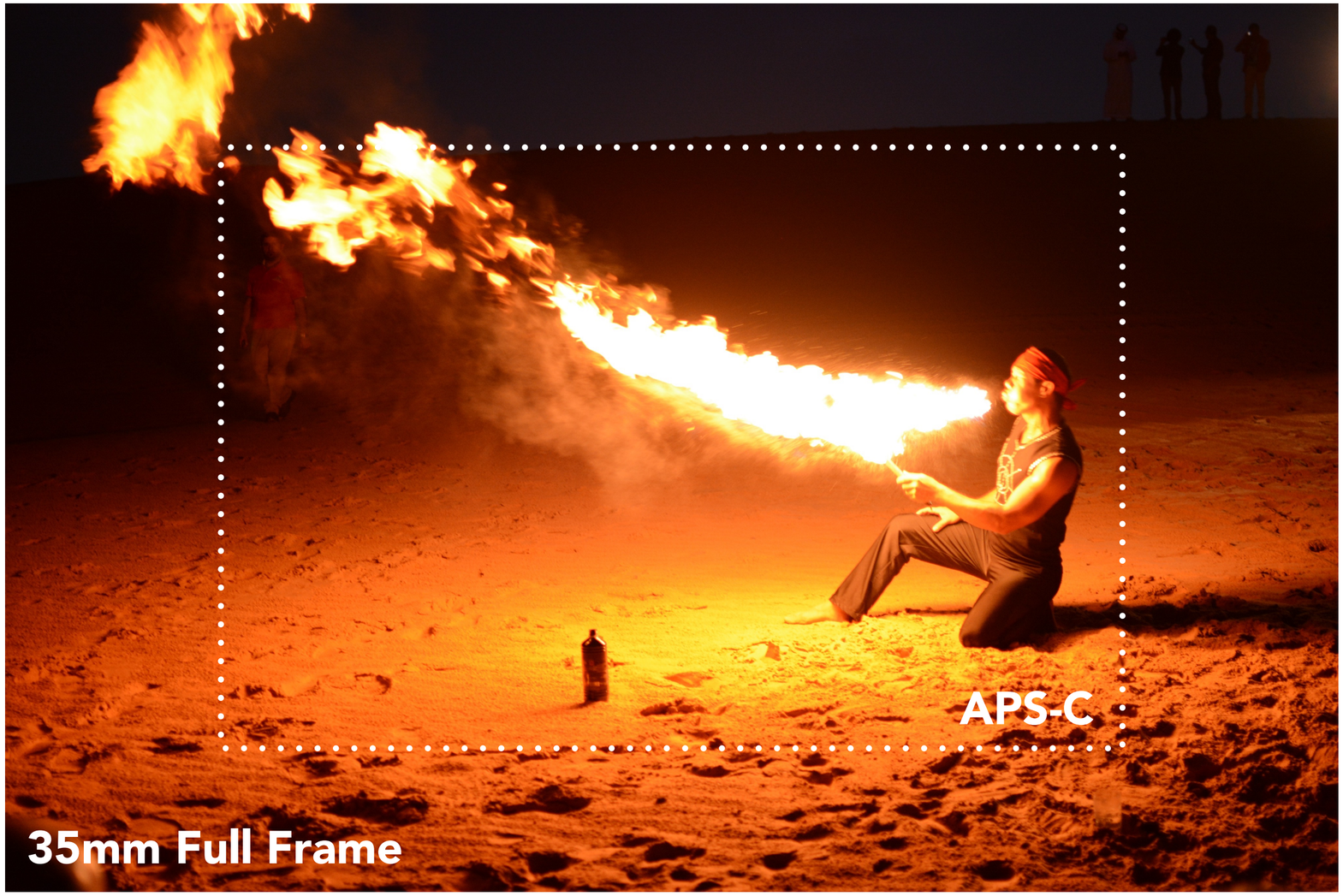

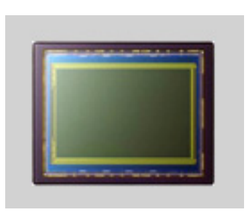

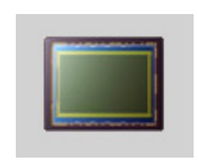

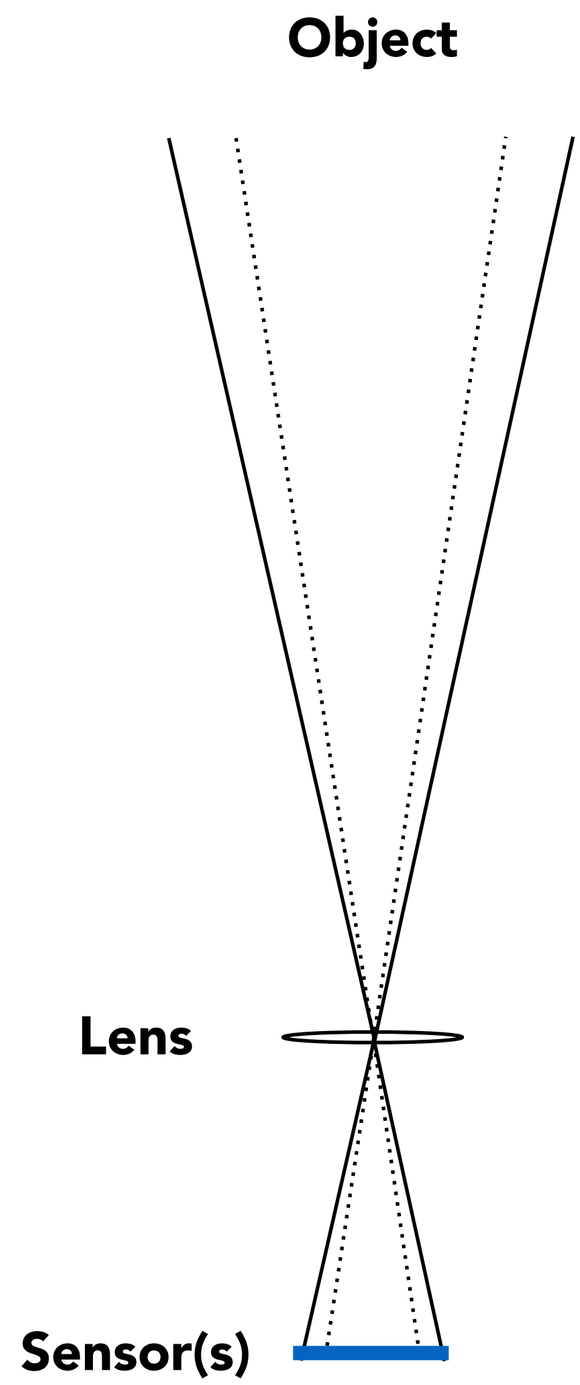

Sensor Sizes

Sensor Name	Medium Format	Full Frame	APS-H	APS-C	4/3	1"	1/1.63"	1/2.3"	1/3.2"
Sensor Size	53.7 x 40.2mm	36 x 23.9mm	27.9x18.6mm	23.6x15.8mm	17.3x13mm	13.2x8.8mm	8.38x5.59mm	6.16x4.62mm	4.54x3.42mm
Sensor Area	21.59 cm²	8.6 cm²	5.19 cm²	3.73 cm²	2.25 cm²	1.16 cm²	0.47 cm²	0.28 cm²	0.15 cm²
Crop Factor	0.64	1.0	1.29	1.52	2.0	2.7	4.3	5.62	7.61
Image	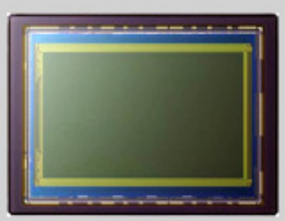								
Example									

Credit: lensvid.com

Maintain FOV on Smaller Sensor?

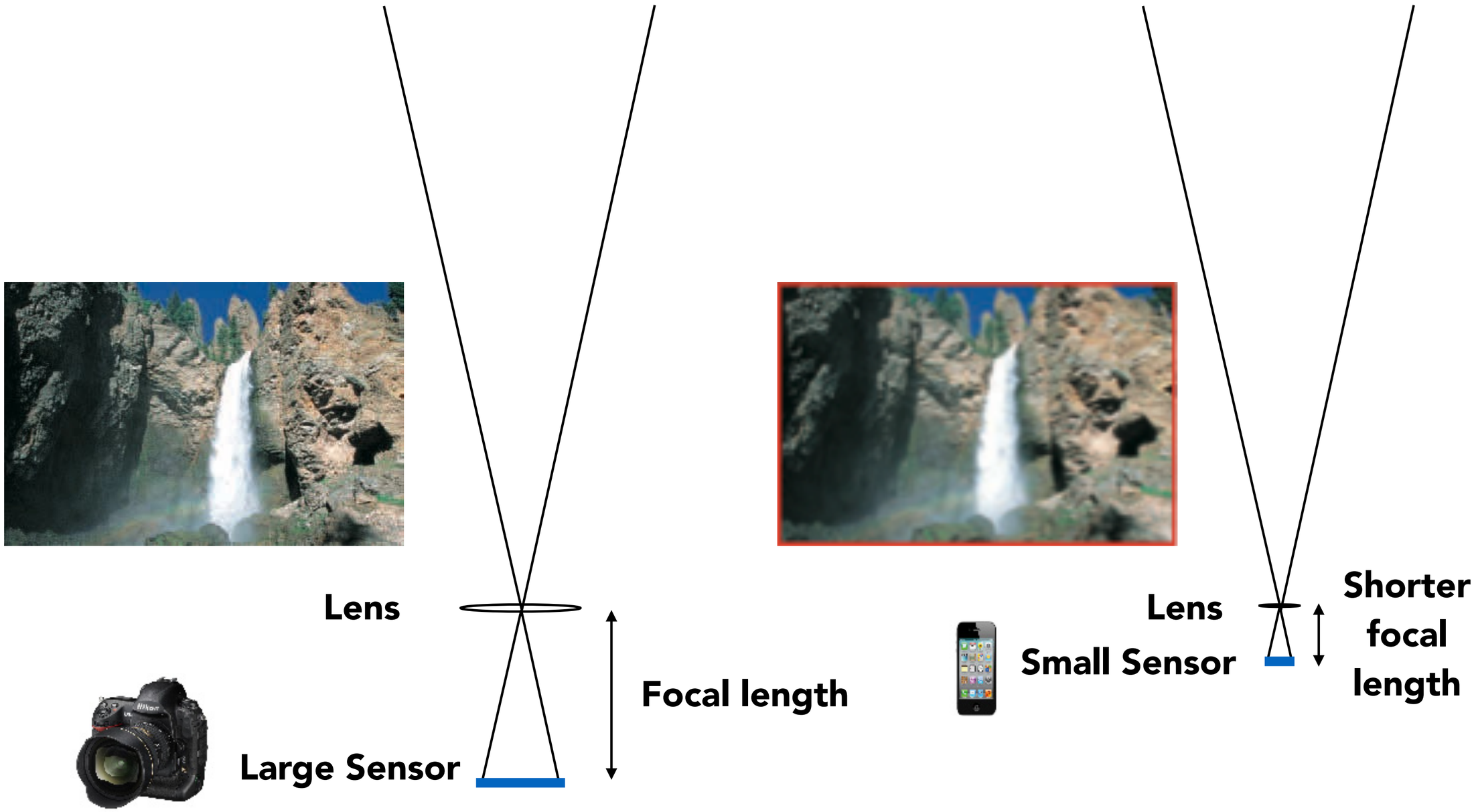

To maintain FOV, decrease focal length of lens in proportion to width/height of sensor

Focal Length v. Field of View

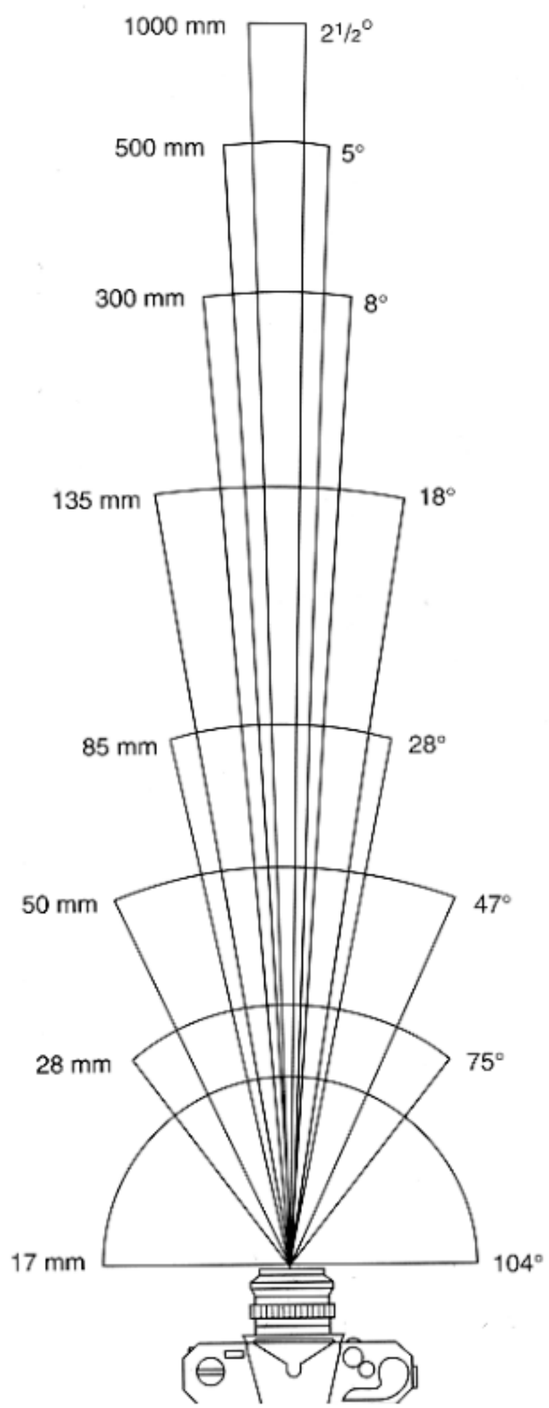

- For historical reasons, it is common to refer to angular field of view by focal length of a lens used on a 35mm-format film (36 x 24mm)
- Examples of focal lengths on 35mm format:
  - 17mm is wide angle 104°
  - 50mm is a "normal" lens 47°
  - 200mm is telephoto lens 12°
- Careful! When we say current cell phones have approximately 28mm "equivalent" focal length, this uses the above convention. The physical focal length is often 5-6 times shorter, because the sensor is correspondingly smaller

Focal Length v. Field of View

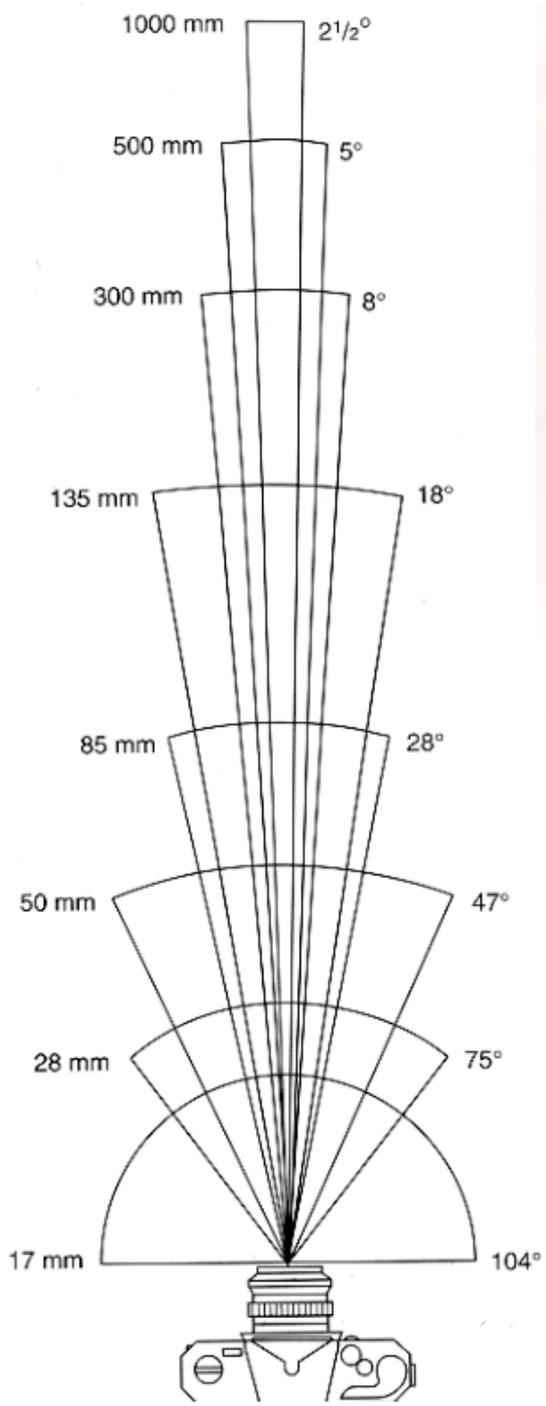

From London and Upton, and Canon EF Lens Work III

Focal Length v. Field of View

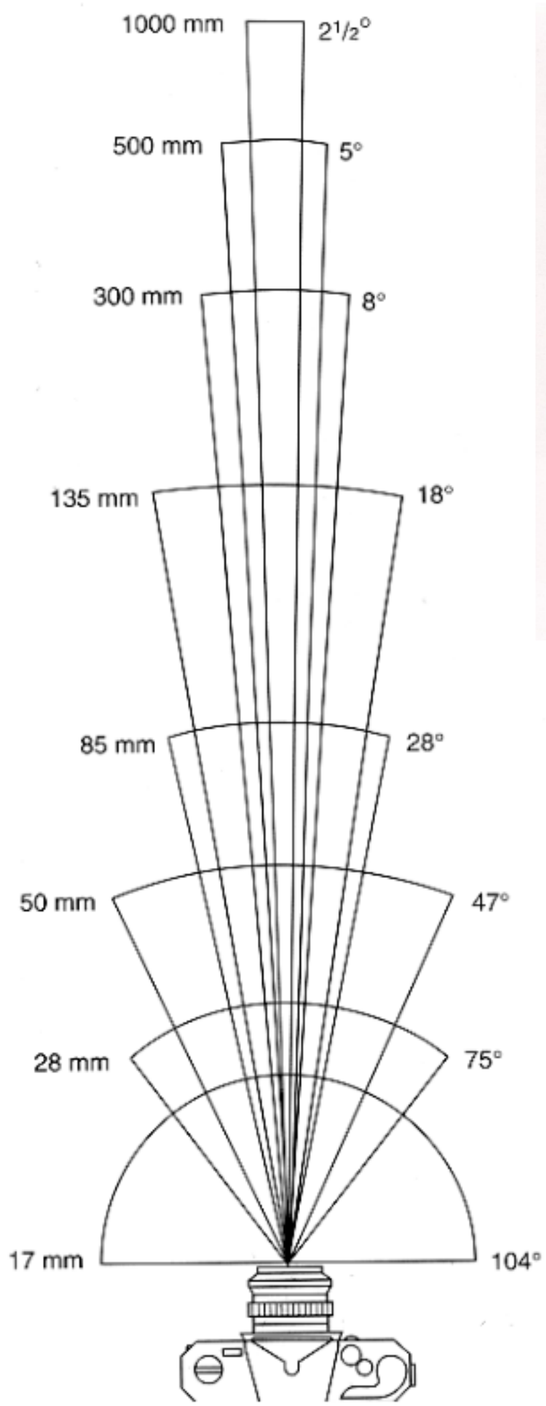

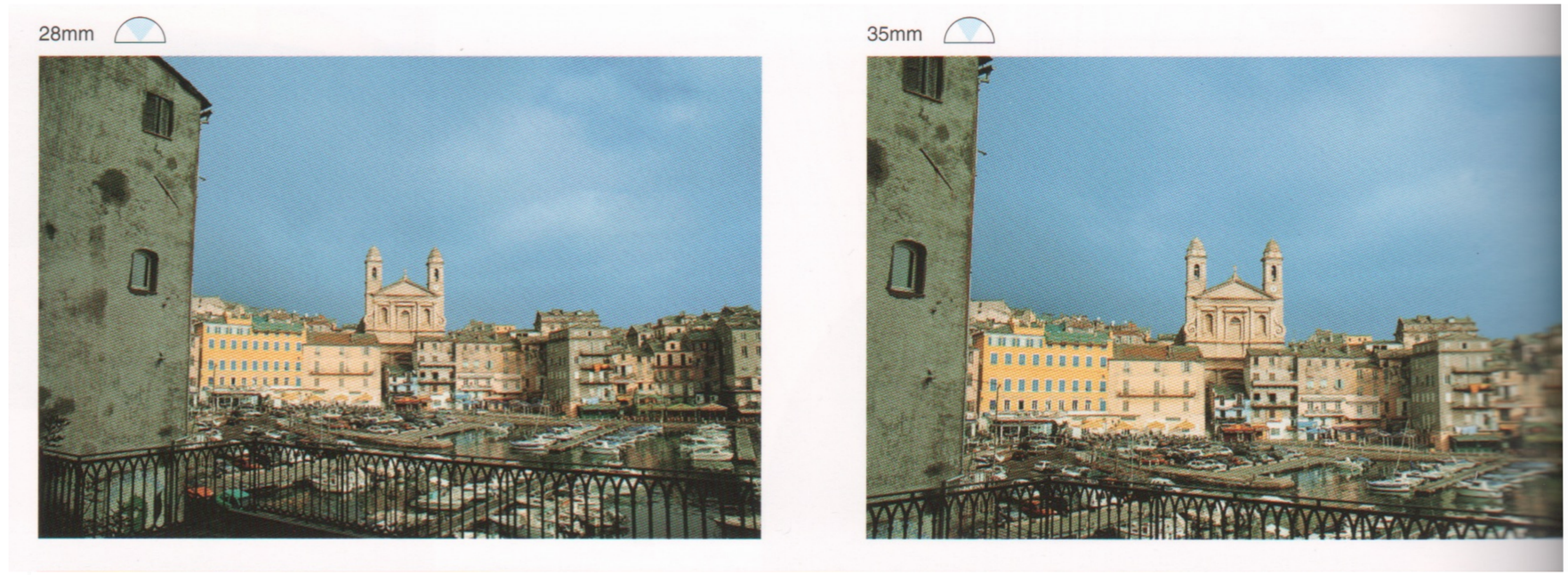

From London and Upton, and Canon EF Lens Work III

Focal Length v. Field of View

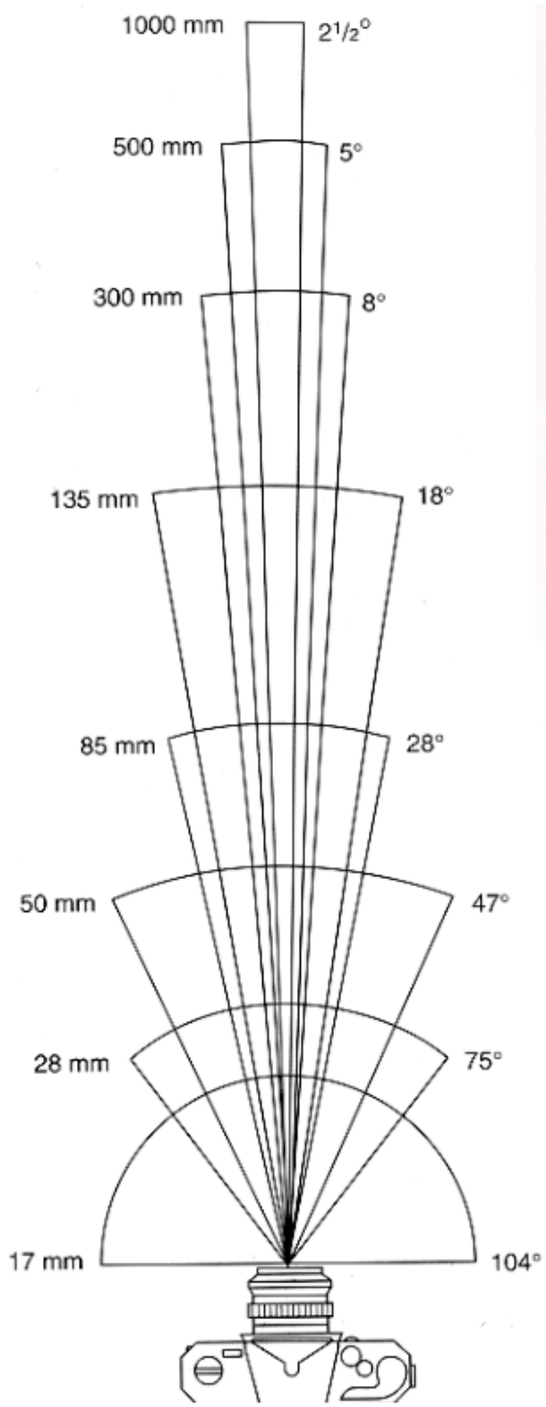

From London and Upton, and Canon EF Lens Work III

Focal Length v. Field of View

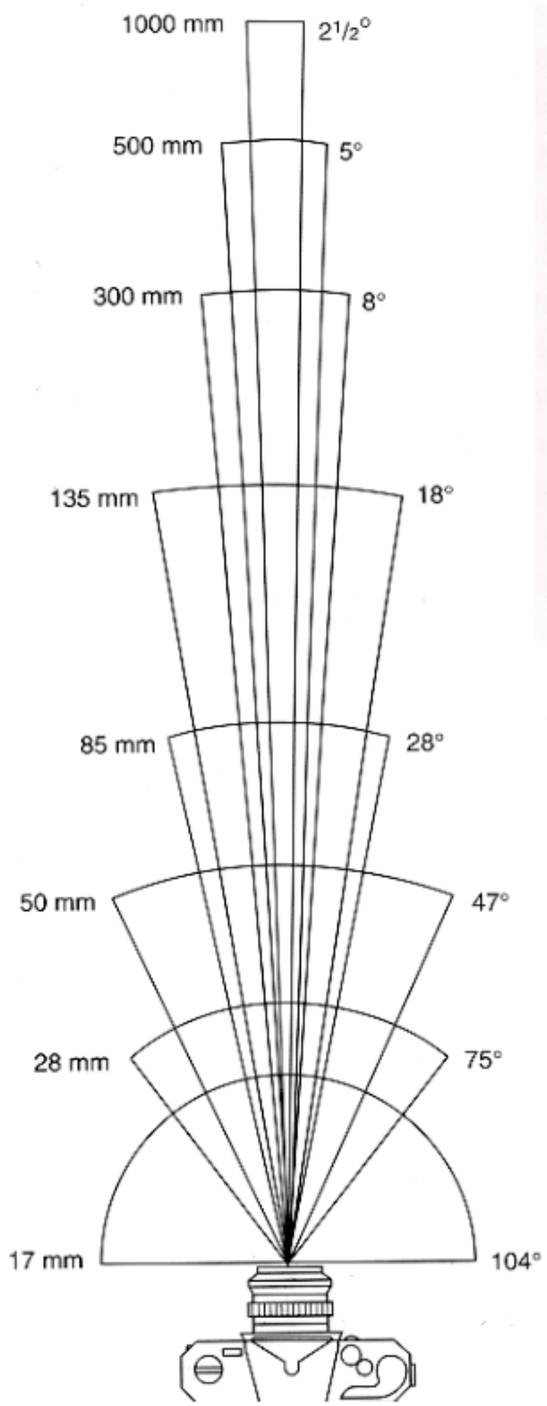

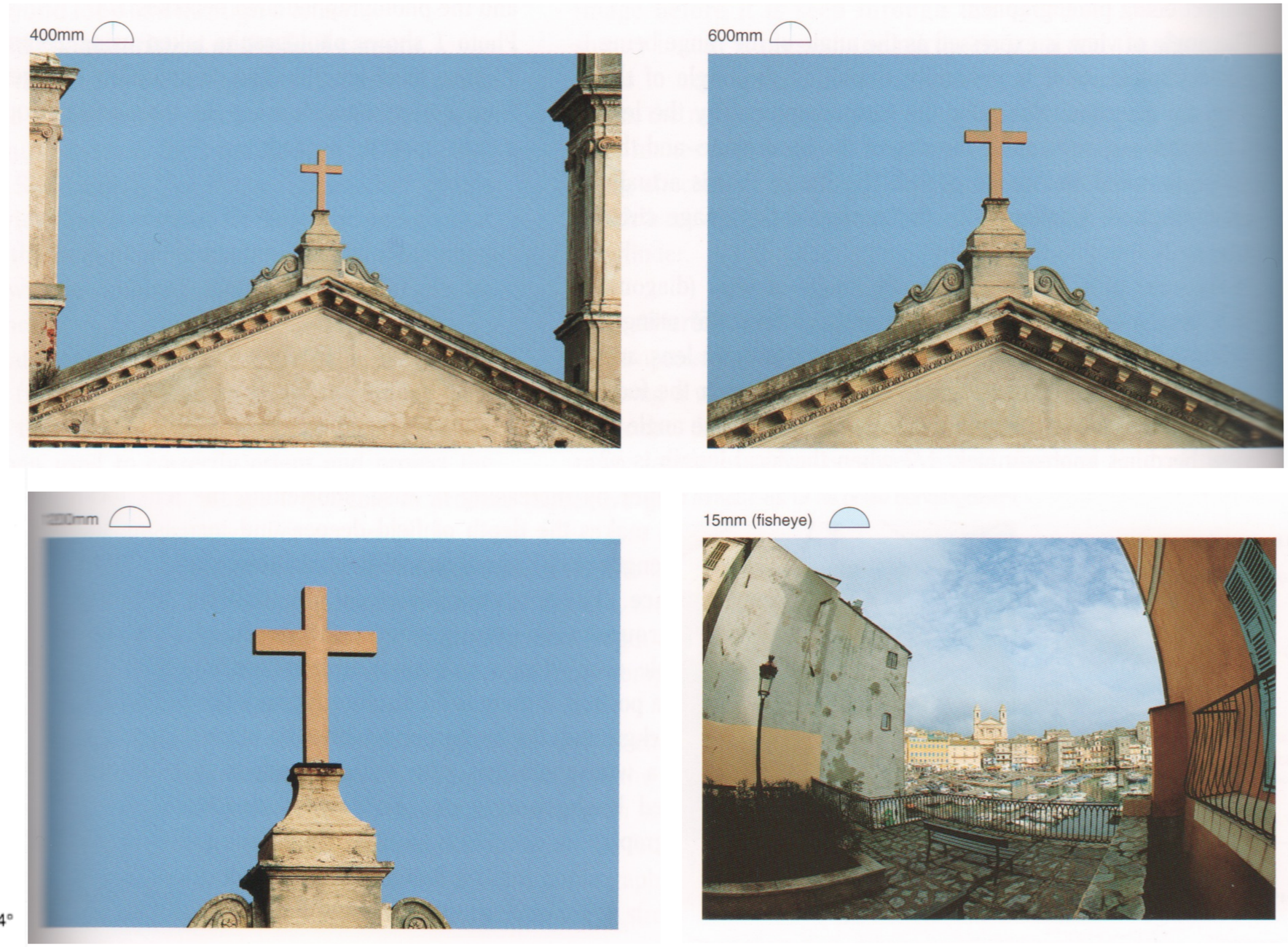

From London and Upton, and Canon EF Lens Work III

Wide angle: 15mm, f/2.8

Wide angle: 18mm, 1/750, f/8


Normal: 50mm, 1/80, f/1.4

Normal: 64mm, 1/3200, f/2.8

Telephoto: 150mm, 1/640, f/1.8

Telephoto: 200mm, 1/200, f/2.8

Telephoto: 420mm, 1/1600, f/4

Telephoto: 420mm, 1.0s, f/4

Telephoto: 420mm, 4.0s, f/4

Perspective Composition (Photographer’s Mindset)

Perspective Composition – Camera Position / Focal Length

From Canon EF Lens Work III

In this sequence, distance from subject increases with focal length to maintain image size of human subject.

Notice the dramatic change in background perspective.

Perspective Composition

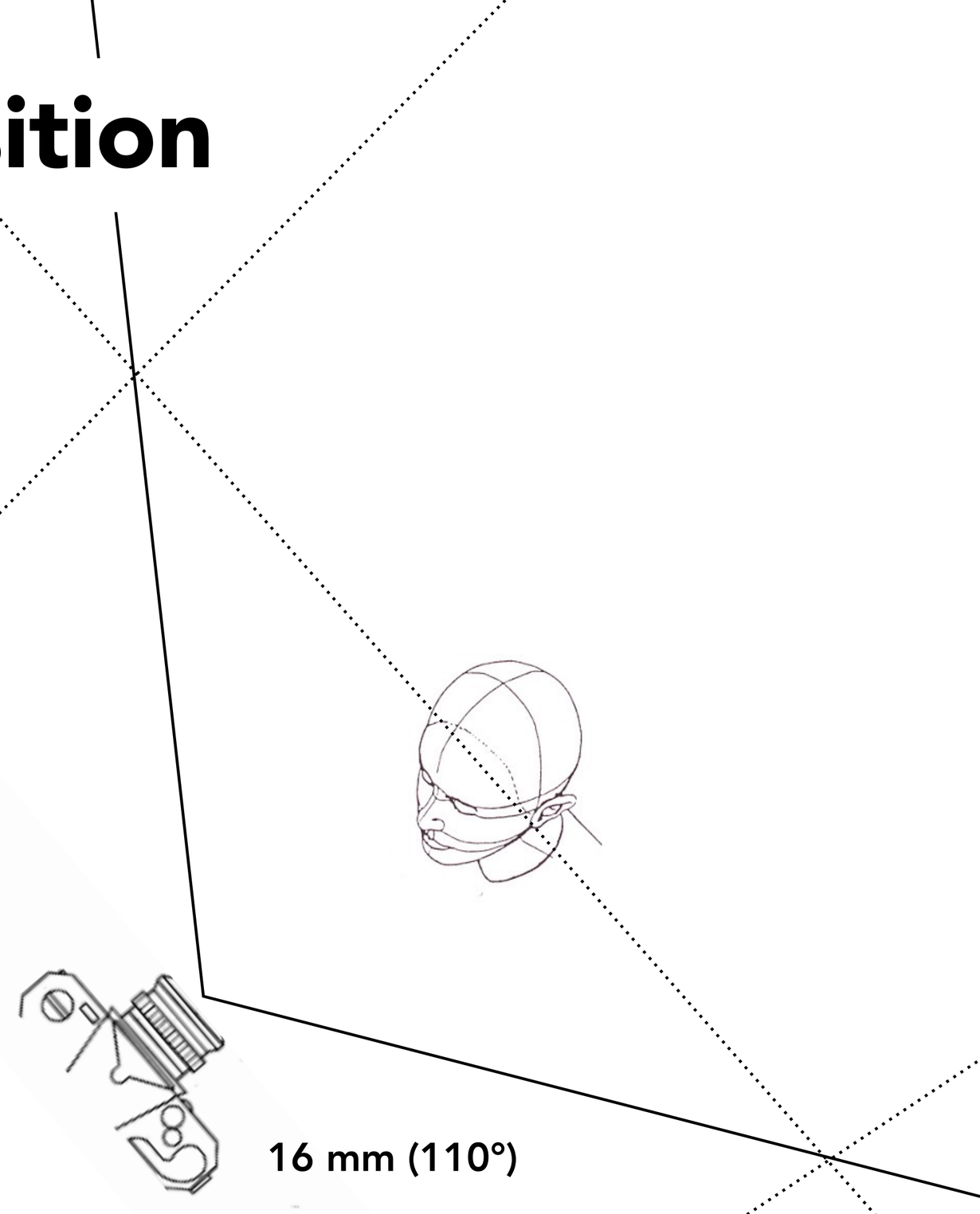

Up close and zoomed wide
with short focal length

Perspective Composition

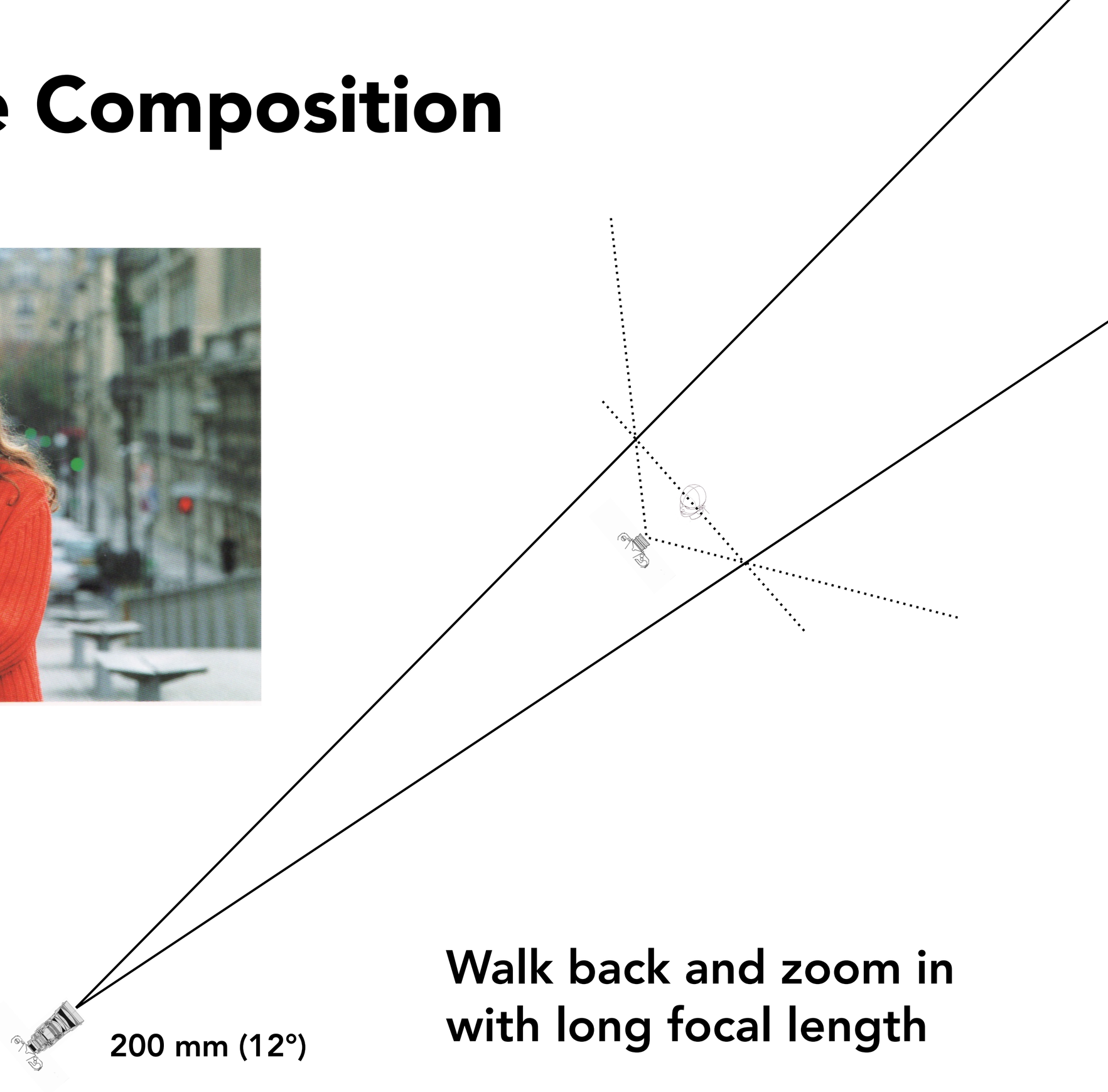

Walk back and zoom in with long focal length

A Photographer's Mindset

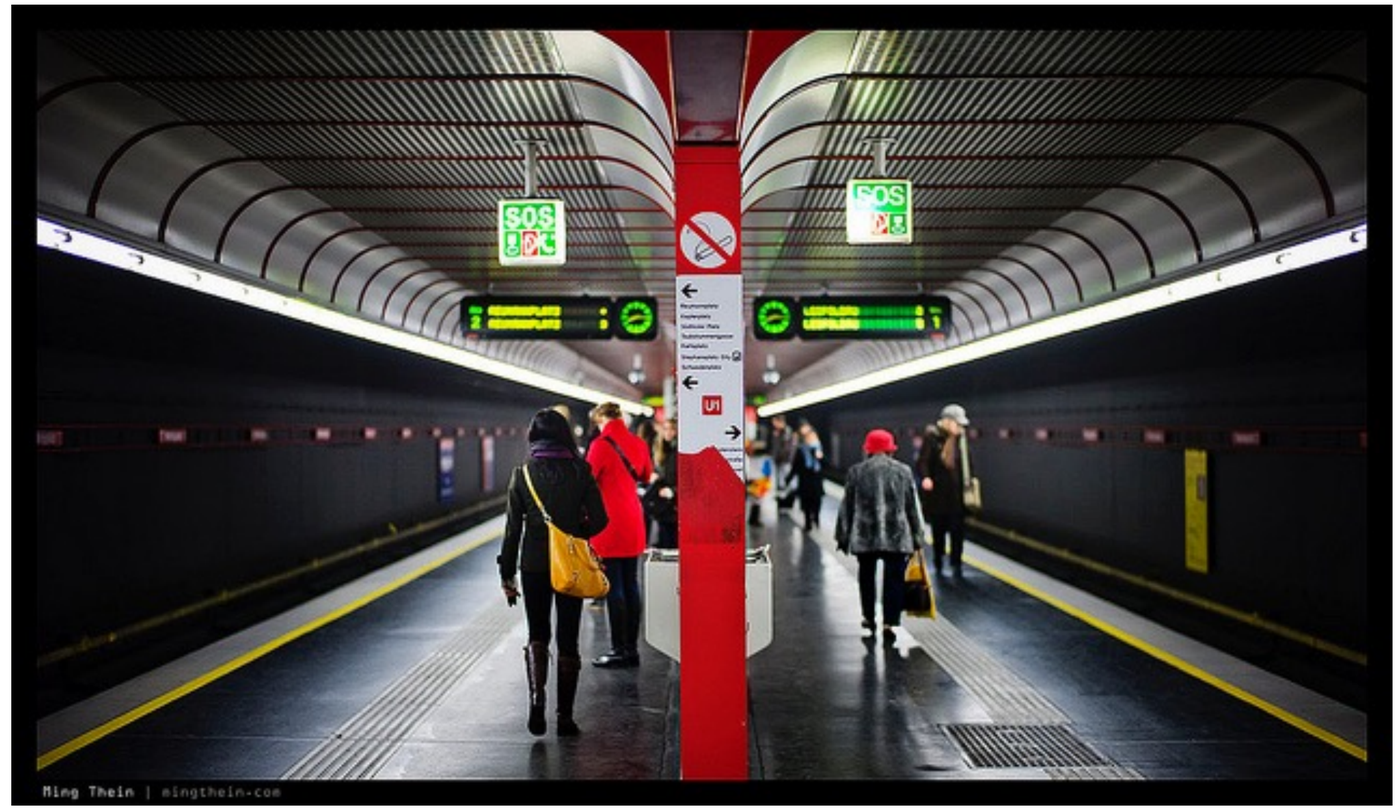

"Choose your perspective before you choose your lens."

— Ming Thein, mingthein.com

Improve Your Own Photography

Tip 1: Make sure you have a strong subject

- Make it prominent, e.g. 1/3 of your image

Tip 2: Choose a good perspective relationship (relative size) between your subject and background (or foreground)

- Complement, don’t compete with the subject

Tip 3: Change the zoom and camera distance to your subject

- Implement: actively zoom, and move your camera in/out
- Even works with your smartphone!

Dolly-Zoom Cinema Technique – “Vertigo Effect”

First used by Alfred Hitchcock in “Vertigo” 1958

Dolly-Zoom Cinema Technique – a.k.a. “Vertigo Effect”

By Steven Spielberg in “Jaws” 1975

Exposure

Exposure Duration:
Fast and Slow Photography

High-Speed Photography

long exposure
bright strobe illumination
gun synced to camera

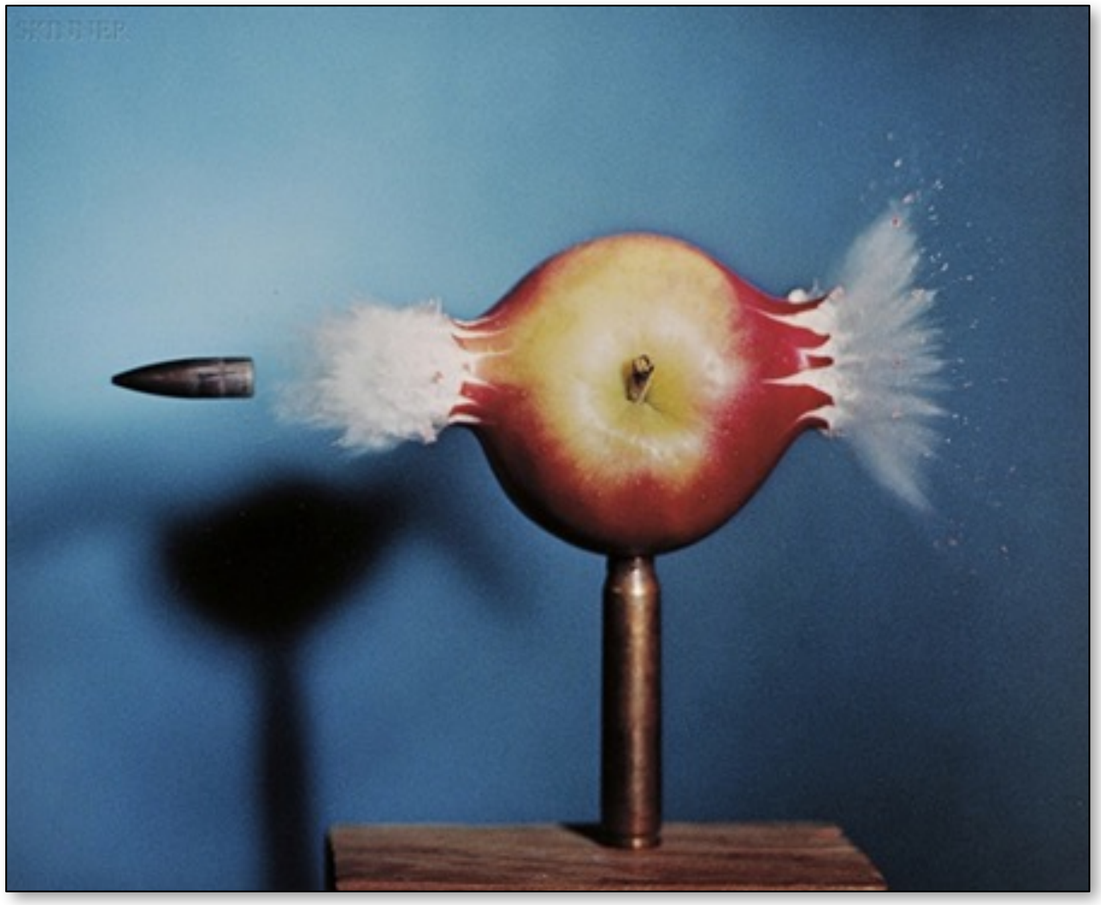

Harold Edgerton

Mark Watson

Slide courtesy L. Waller

High-Speed Photography

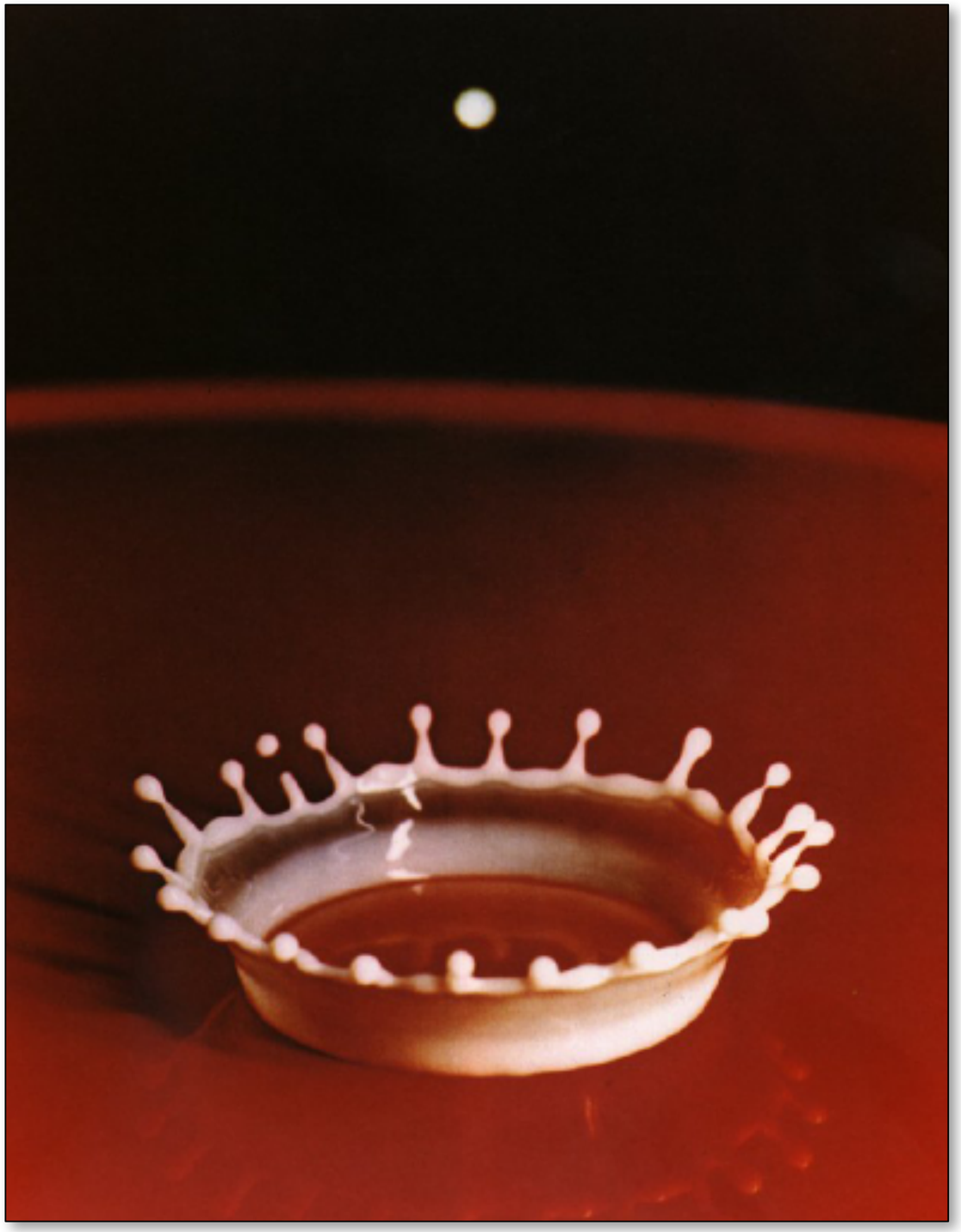

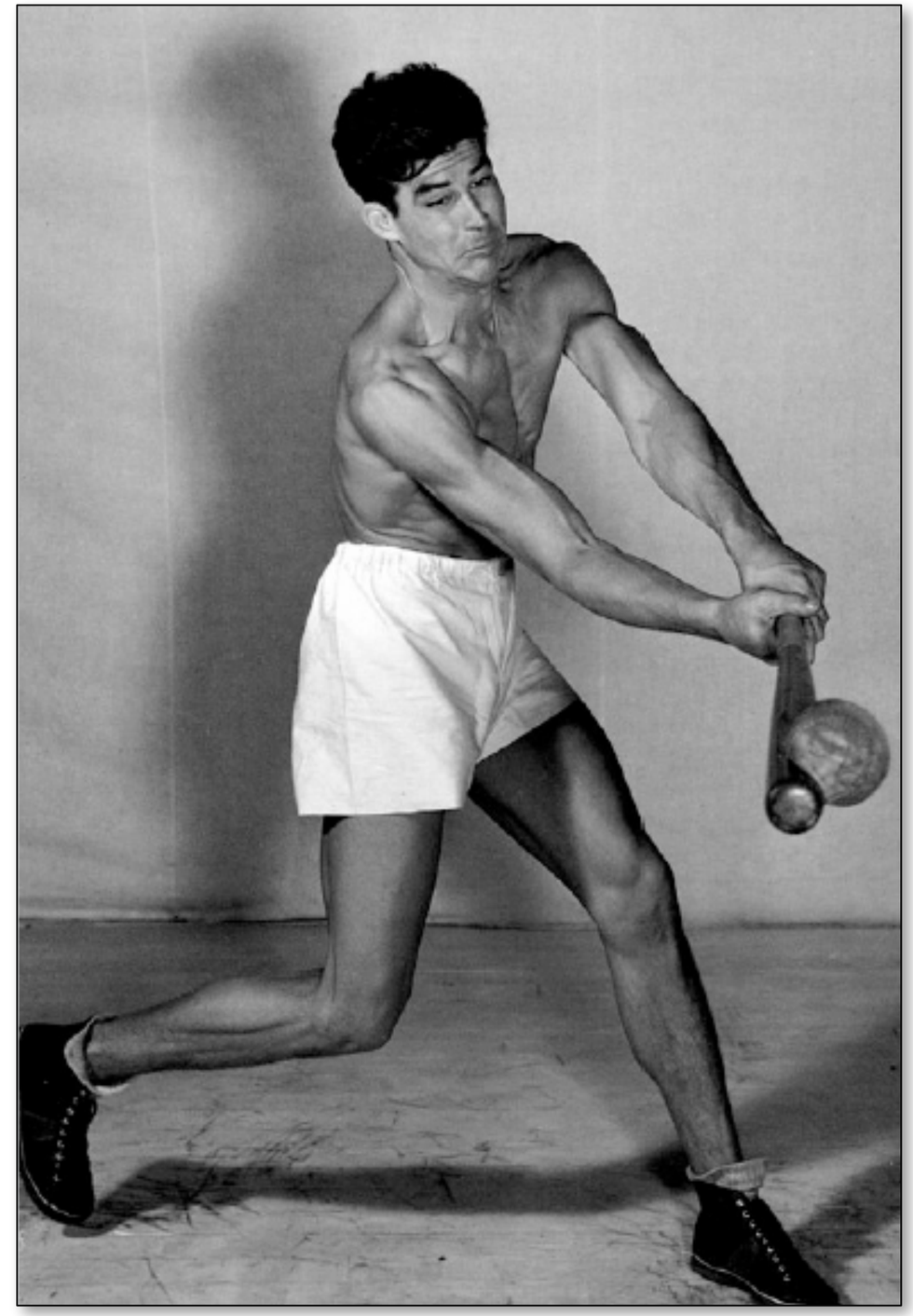

Harold Edgerton

High-Speed Photography

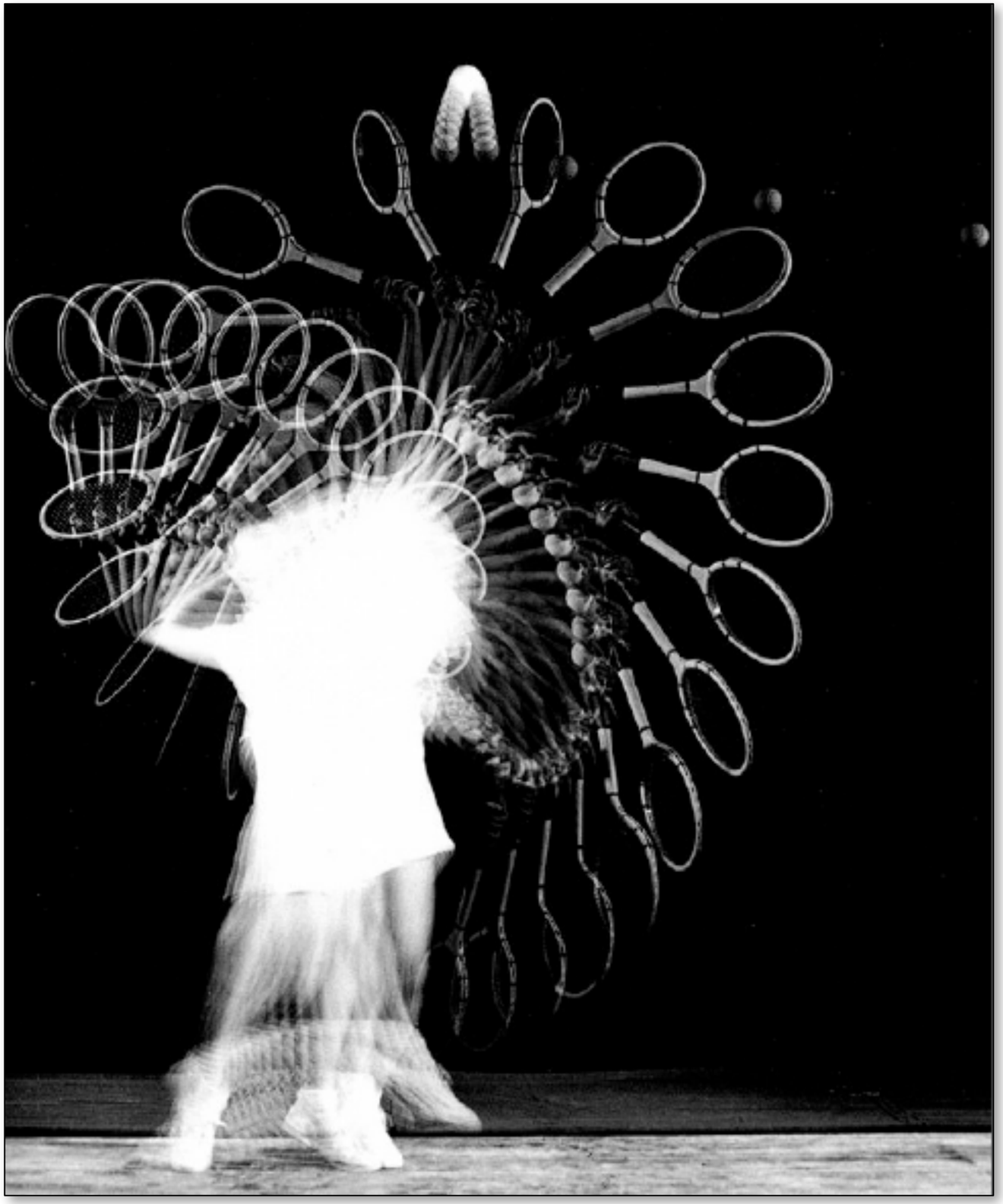

Harold Edgerton

Long-Exposure Photography

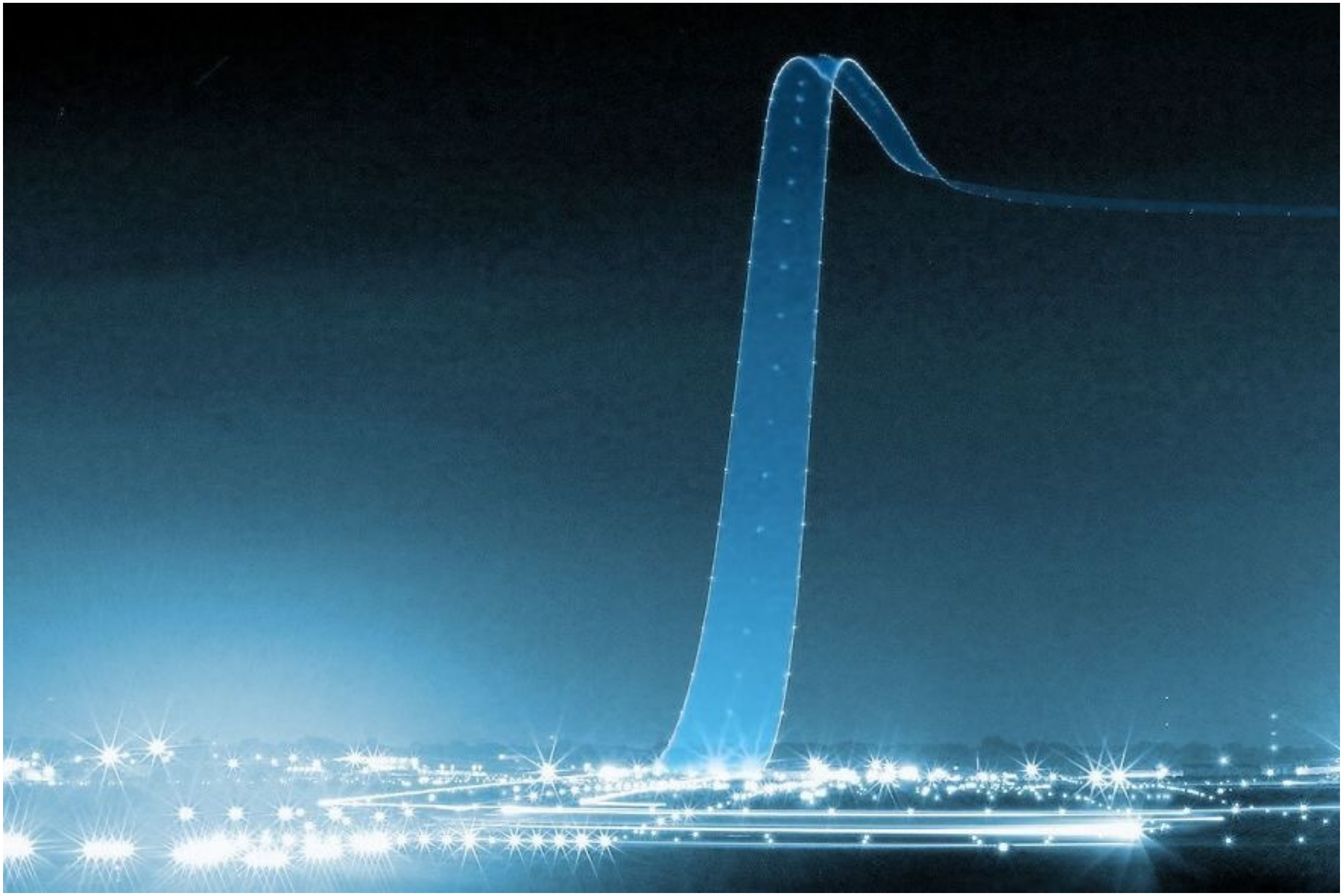

https://www.demilked.com/best-long-exposure-photos/

Long-Exposure Photography

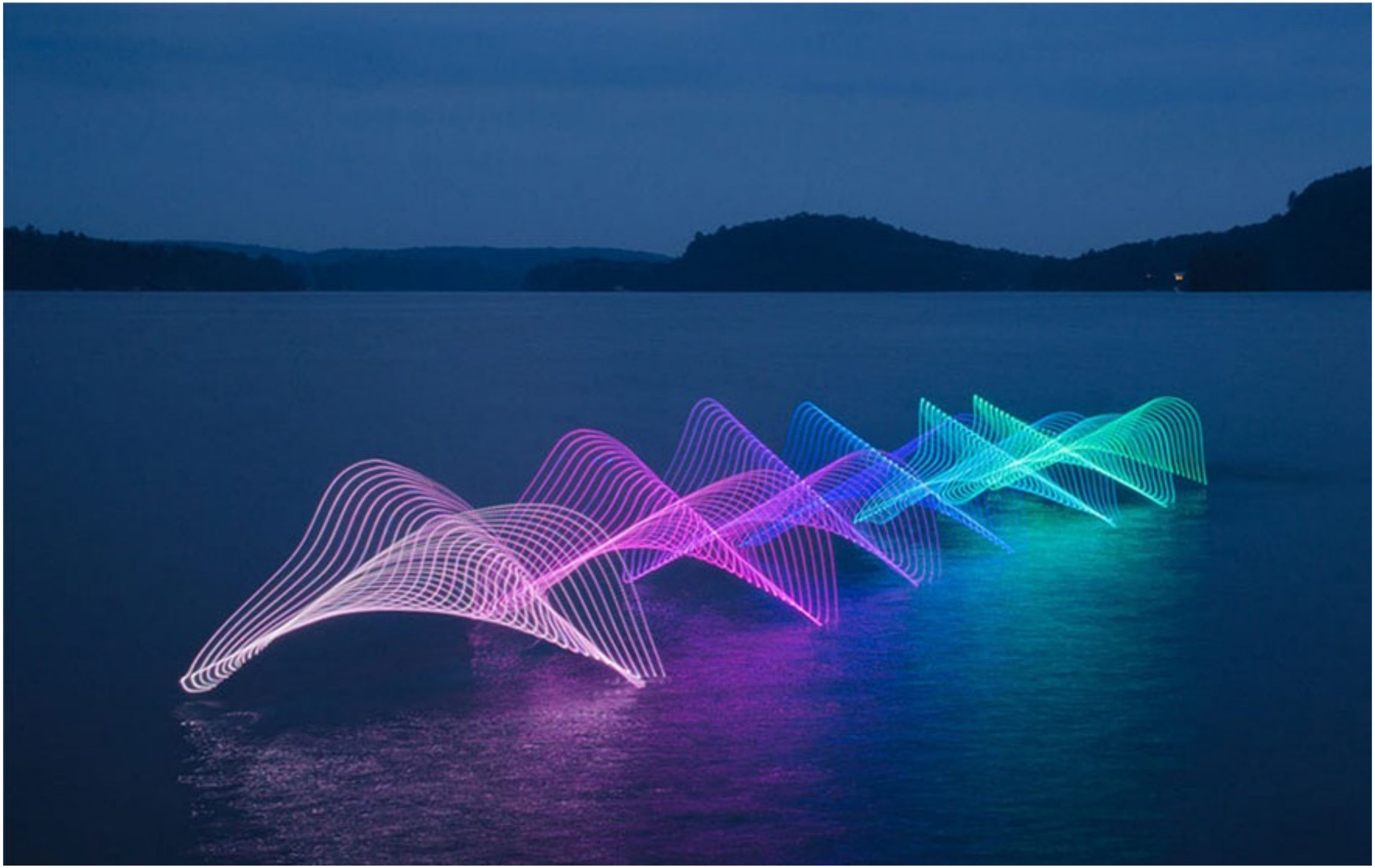

https://www.demilked.com/best-long-exposure-photos/

Long-Exposure Photography

https://www.demilked.com/best-long-exposure-photos/

Exposure

- Q = T x E
- Exposure = time x irradiance
- Exposure time (T)
  - Controlled by shutter
- Irradiance (E)
  - Power of light falling on a unit area of sensor
  - Controlled by lens aperture and focal length

Exposure Levels (1 “Stop” = 2x Exposure)

Exposure bracketing with +/– 1 stop exposure

https://www.dpmag.com/how-to/tip-of-the-week/how-and-why-to-use-auto-exposure-bracketing/

Exposure Controls: Aperture, Shutter, Gain (ISO)

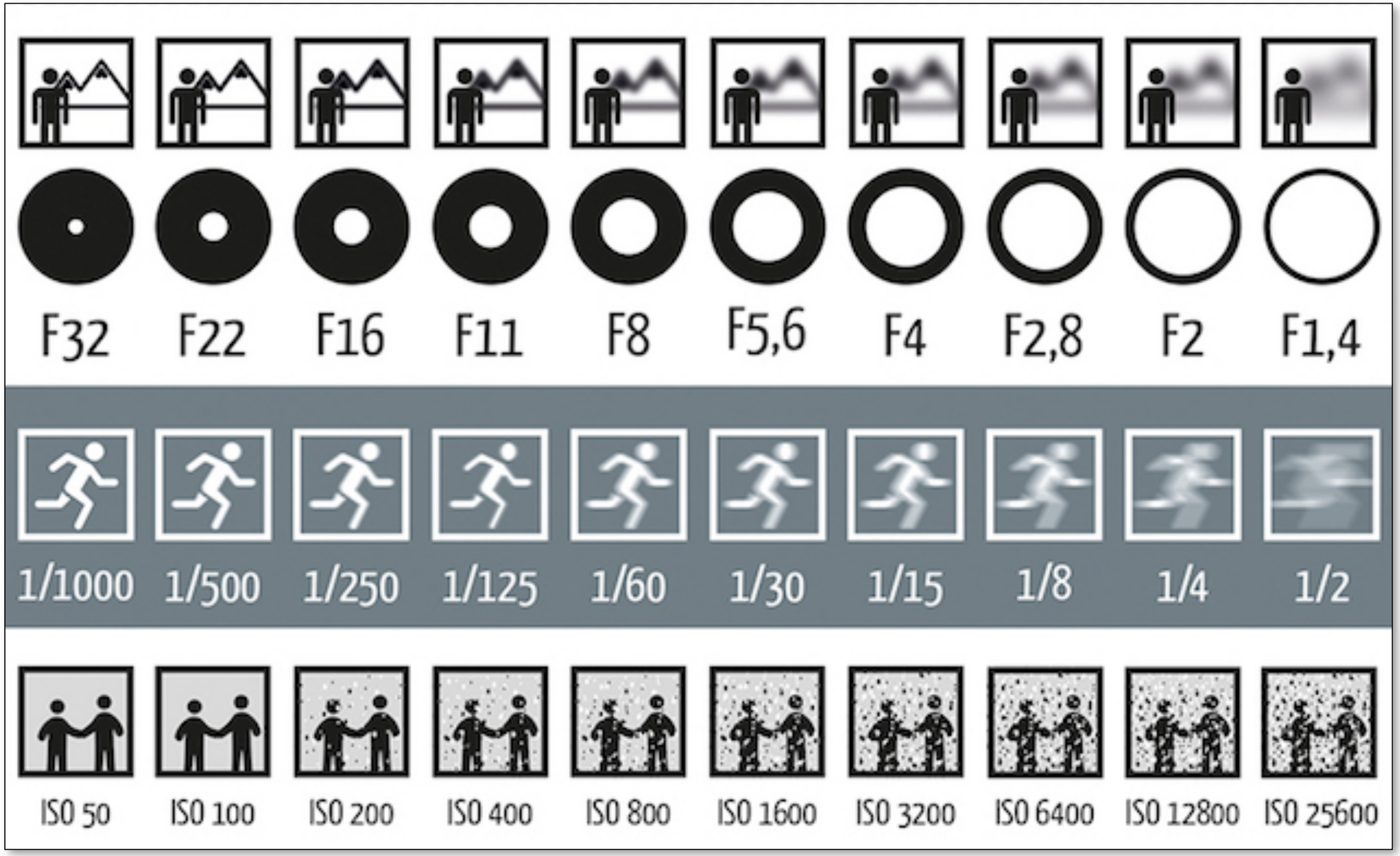

Definition: F-Number of a Lens

- The F-Number of a lens is defined as the focal length divided by the diameter of the aperture
- Common F-stops on real lenses: 1.4, 2, 2.8, 4.0, 5.6, 8, 11, 16, 22, 32
- 1 stop doubles exposure
- Notation: an f-stop of, e.g. 2 is sometimes written f/2, or F:2

Exposure Controls: Aperture, Shutter, Gain (ISO)

Aperture size

- Change the f-stop by opening / closing the aperture (if camera has iris control)

Shutter speed

- Change the duration the sensor pixels integrate light

ISO gain

- Change the amplification (analog and/or digital) between sensor values and digital image values

Constant Exposure: F-Stop vs Shutter Speed

Example: these pairs of aperture and shutter speed give equivalent exposure

F-Stop	1.4	2.0	2.8	4.0	5.6	8.0	11.0	16.0	22.0	32.0
Shutter	1/500	1/250	1/125	1/60	1/30	1/15	1/8	1/4	1/2	1

If the exposure is too bright/dark, may need to adjust f-stop and/or shutter up/down.

ISO (Gain)

Third variable for exposure

Image sensor: trade sensitivity for noise

- Multiply signal before analog-to-digital conversion
- Linear effect (ISO 200 needs half the light as ISO 100)

ISO Gain vs Noise in Canon T2i

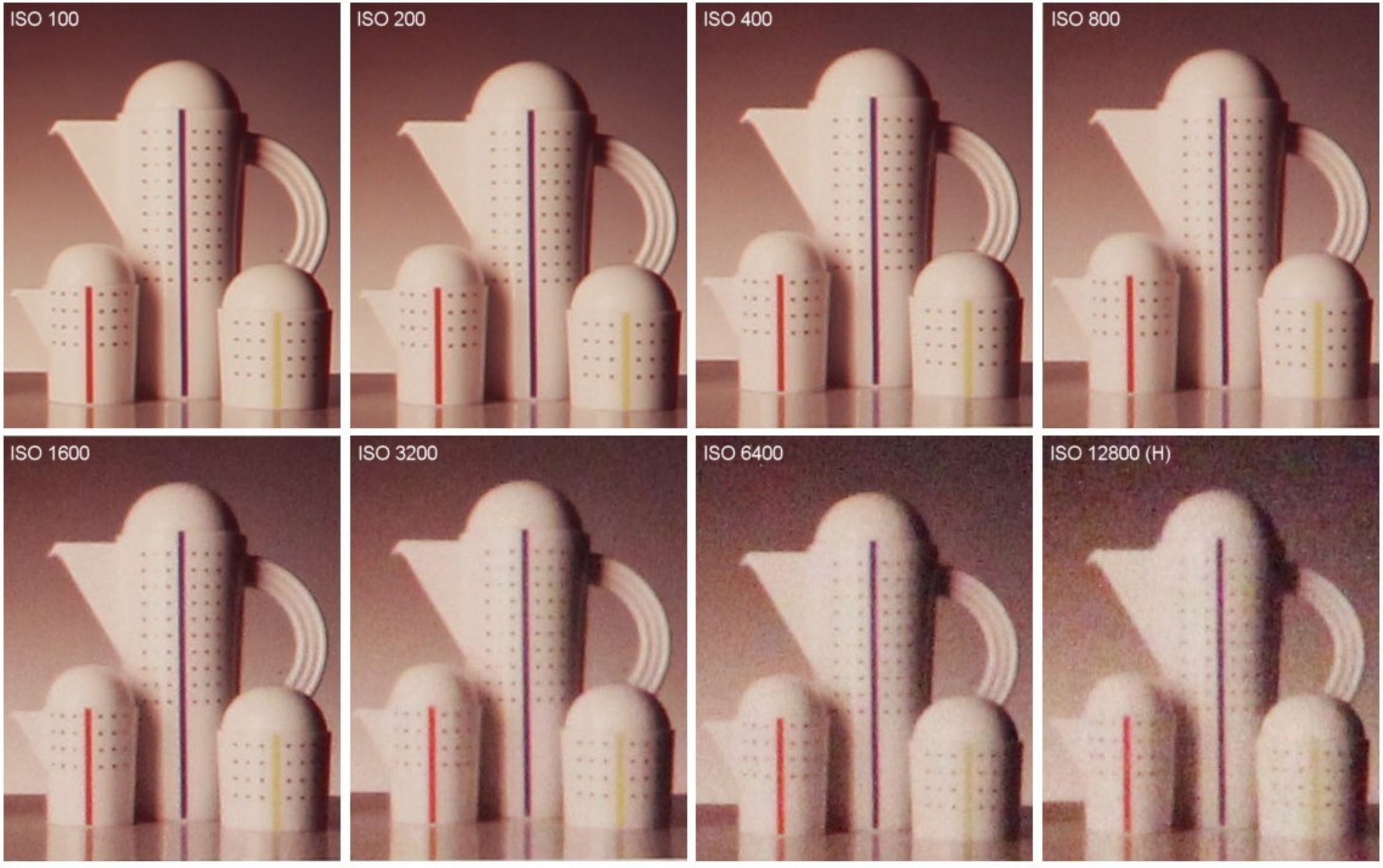

Credit: bobatkins.com

 Note: trend is same in current sensors, but much less noise!

Physical & Electronic Shutters

Physical Shutter (1/25 Sec Exposure)

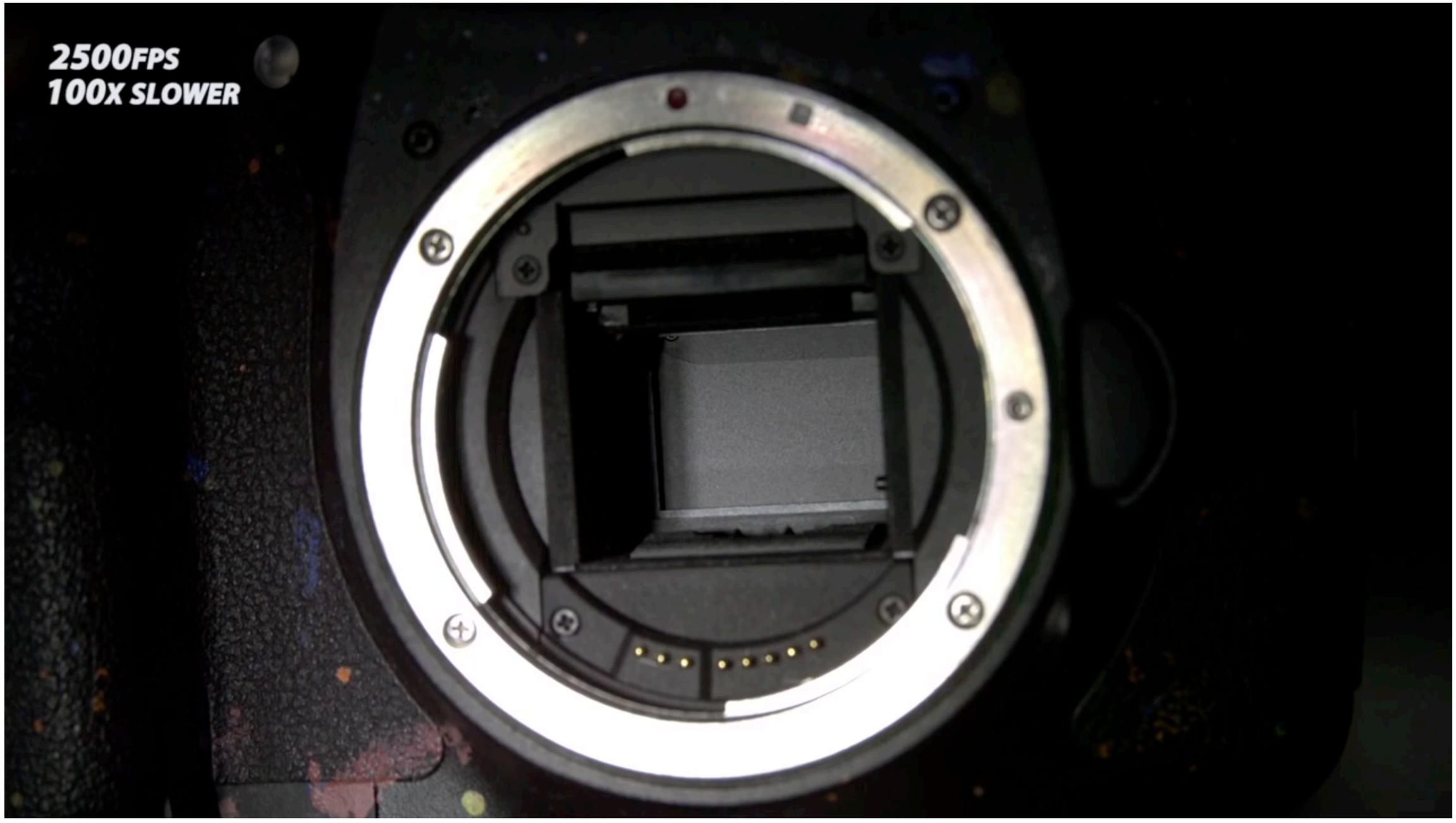

The Slow Mo Guys, https://youtu.be/CmjeCchGRQo

Main Side Effect of Shutter Speed

Motion blur: handshake, subject movement

Doubling shutter time doubles motion blur

Gavin Hoey
http://www.gavtrain.com/?p=3960

Main Side Effect of Shutter Speed

Motion blur: handshake, subject movement

Doubling shutter time doubles motion blur

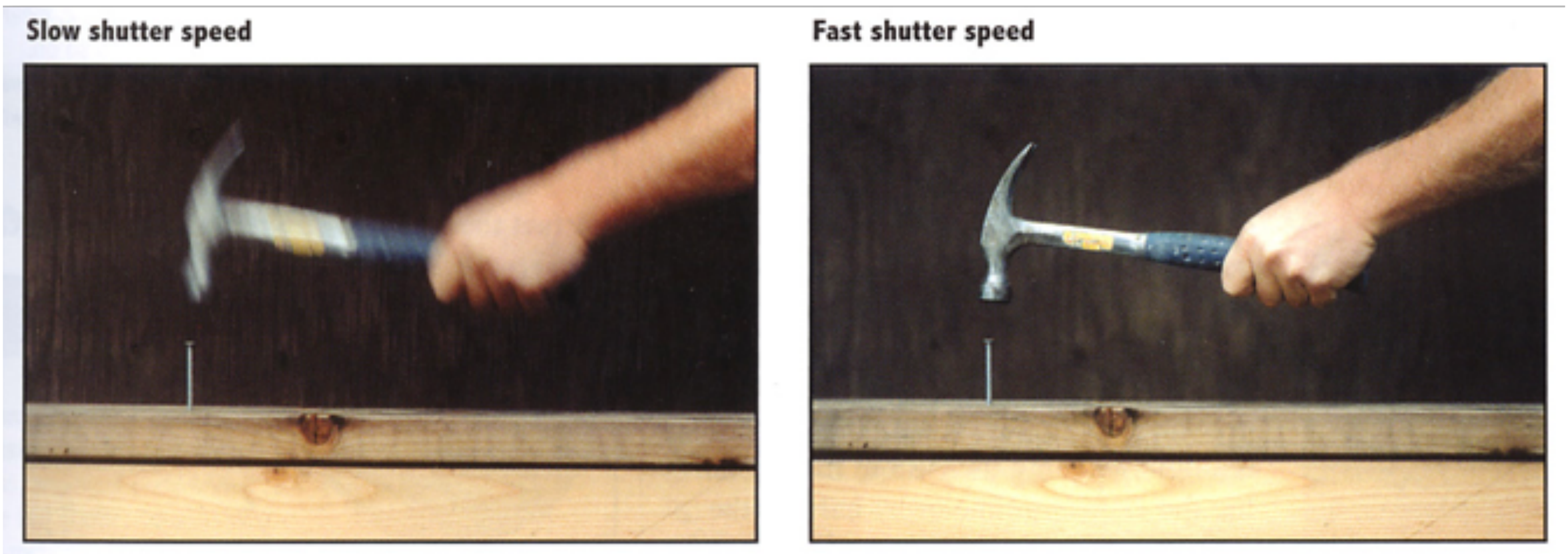

London

Electronic Shutter

- Pixel is electronically reset to start exposure
- Fills with photoelectrons as light falls on sensor
- Reading out pixel electronically "ends" exposure
- Problem: most sensors read out pixels sequentially, takes time (e.g. 1/30 sec) to read entire sensor
  - If reset all pixels at the same time, last pixel read out will have longer exposure
  - So, usually stagger reset of pixels to ensure uniform exposure time
  - Problem: rolling shutter artifact

Electronic Rolling Shutter

Credit: David Adler, B&H Photo Video
https://www.bhphotovideo.com/explora/video/tips-and-solutions/rolling-shutter-versus-global-shutter

Credit: Soren Ragsdale
https://flic.kr/p/5S6rKw

Electronic Rolling Shutter

The Slow Mo Guys, https://youtu.be/CmjeCchGRQo

Electronic Rolling Shutter

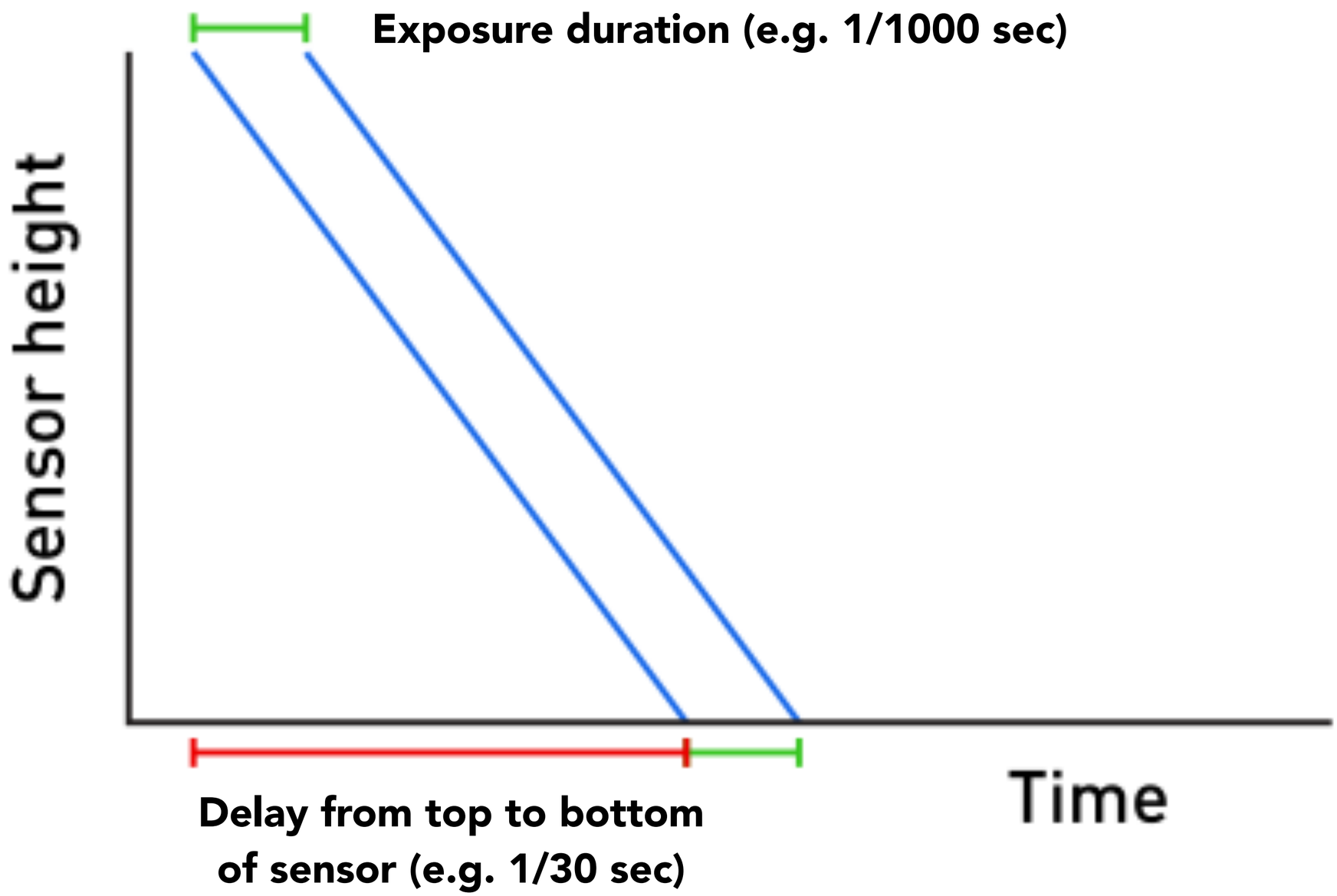

dpreview.com

Focal Plane Shutter (Fast Exposures)

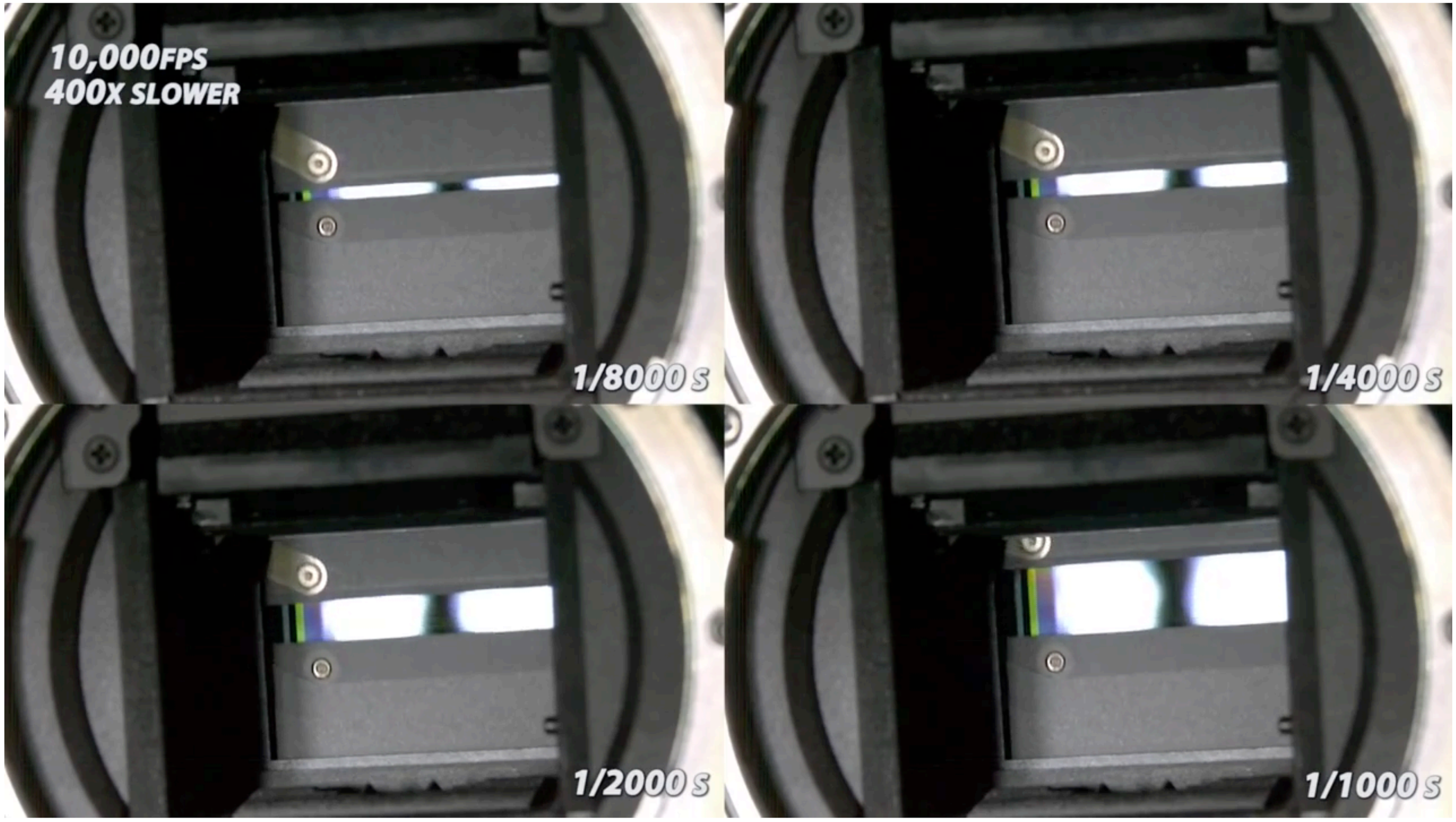

The Slow Mo Guys, https://youtu.be/CmjeCchGRQo

Lenses

Real Lens Designs Are Highly Complex

[Apple]

Real Lens Elements Are Not Ideal – Aberrations

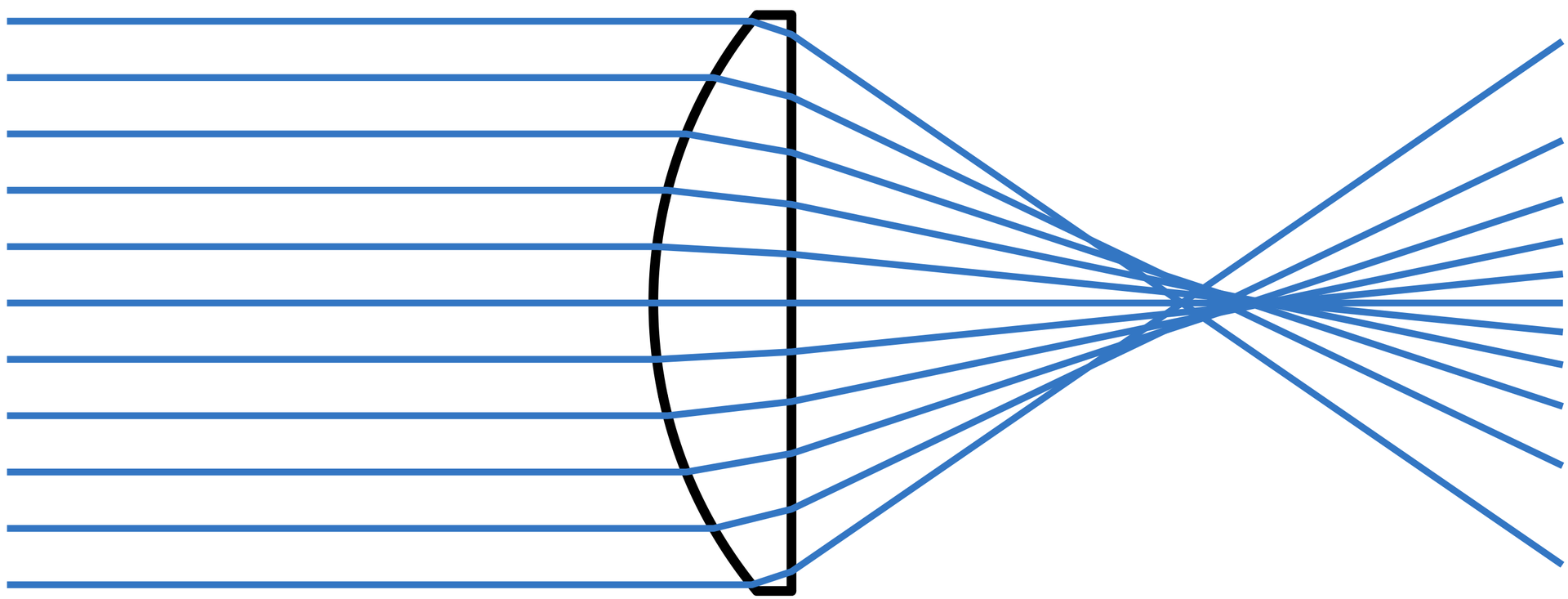

Real plano-convex lens (spherical surface shape).
Lens does not converge rays to a point anywhere.

More discussion next lecture

First: Thin Lens Approximation

Ideal Thin Lens – Focal Point

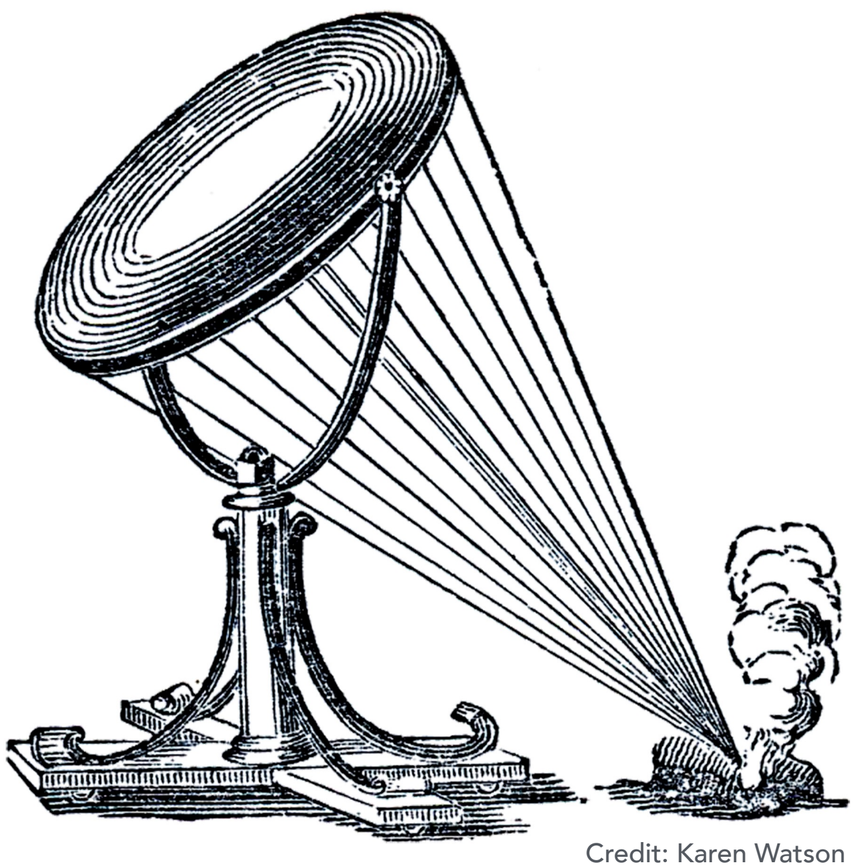

Credit: Karen Watson

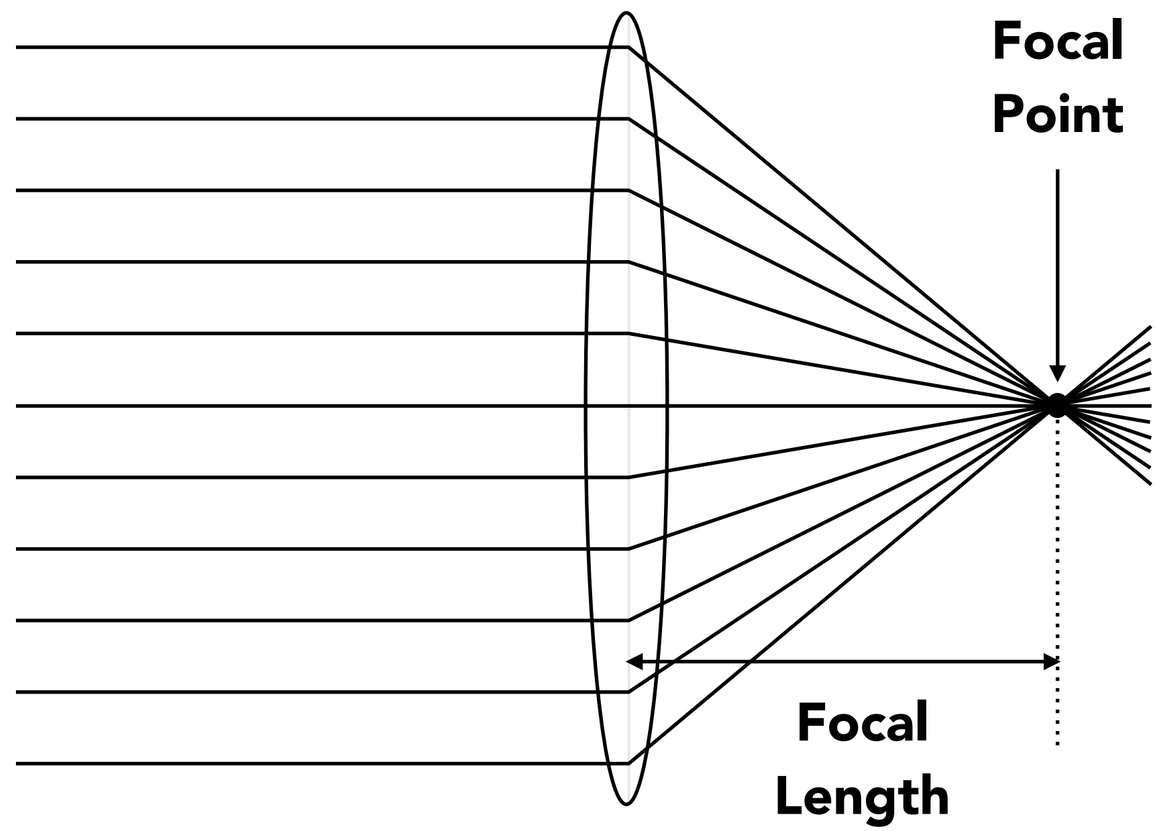

Assume all parallel rays entering a lens pass through its focal point.

Gauss' Ray Diagrams

Gauss' Ray Tracing Construction

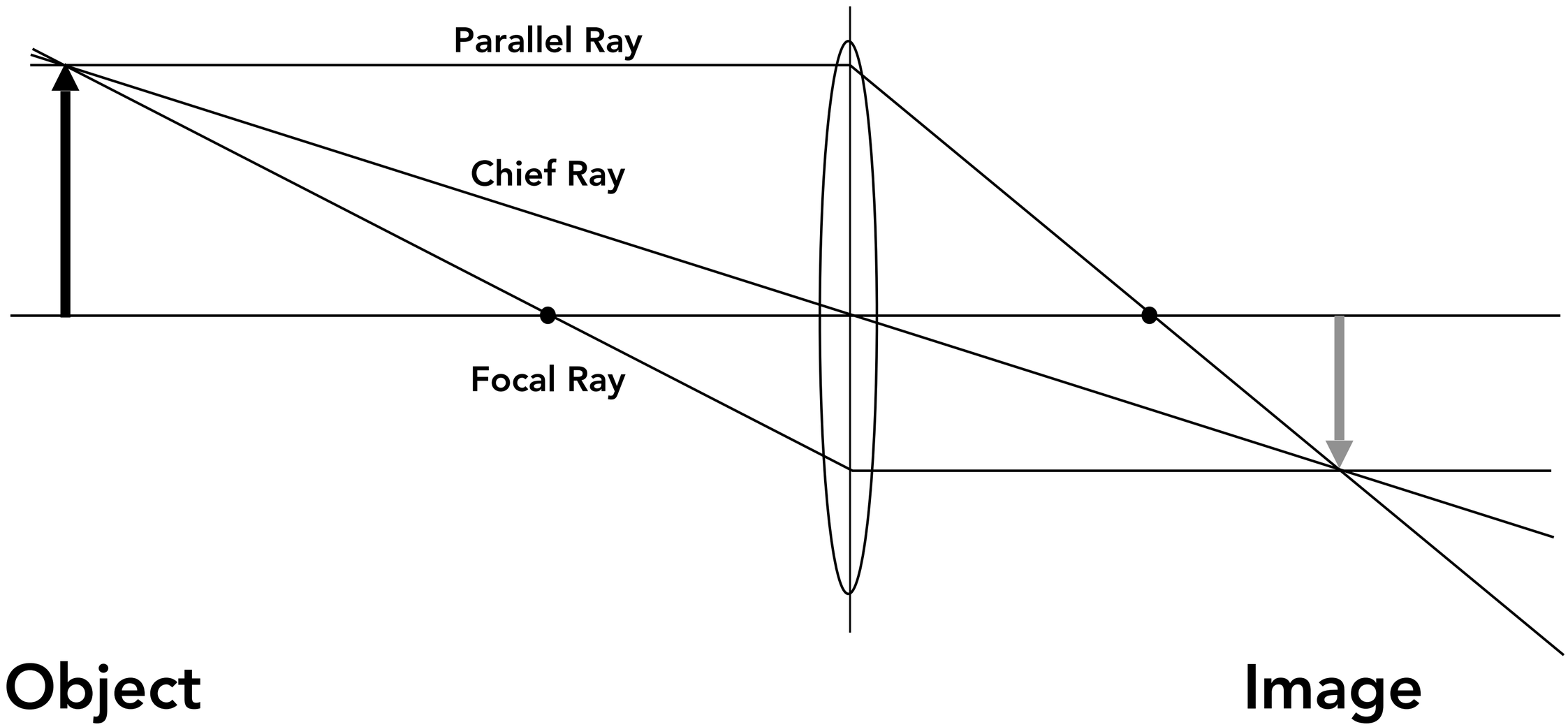

Gauss' Ray Tracing Construction

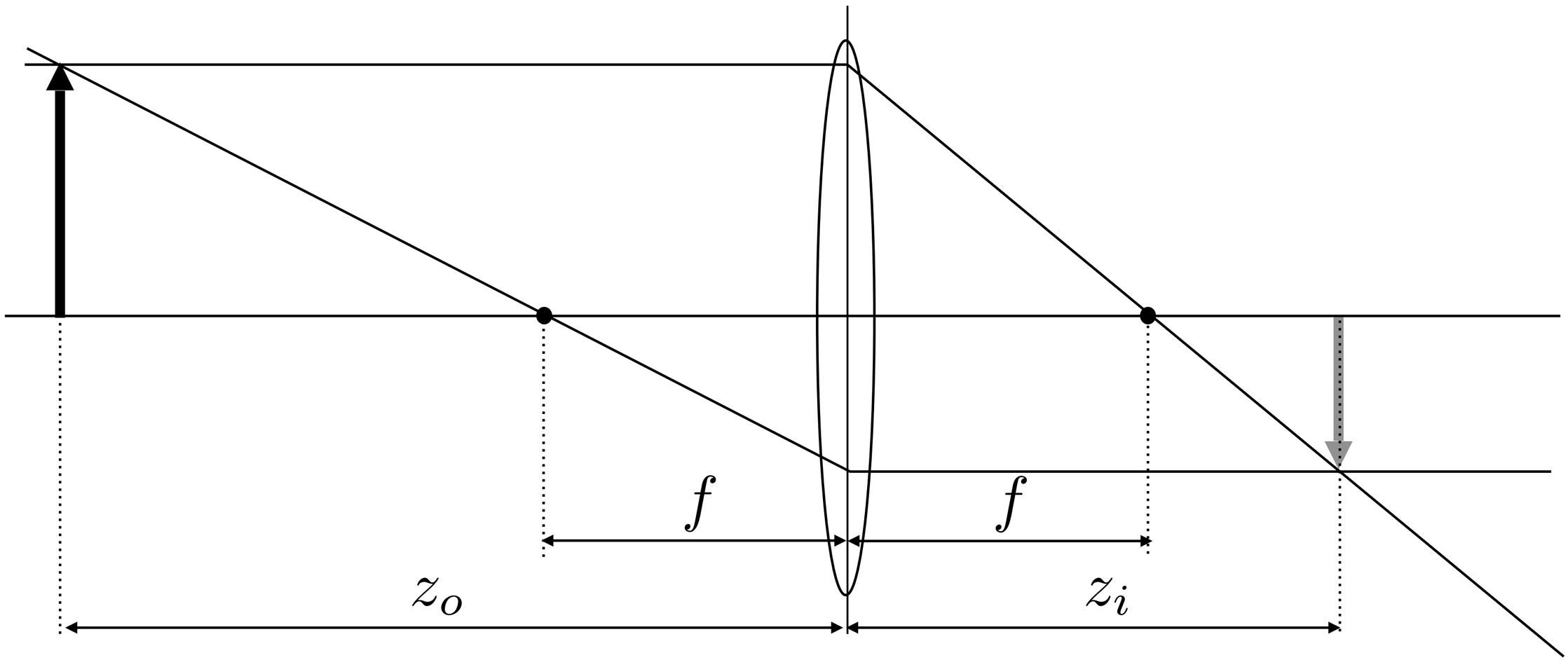

What is the relationship between conjugate depths z_o, z_i?

Gauss' Ray Tracing Construction

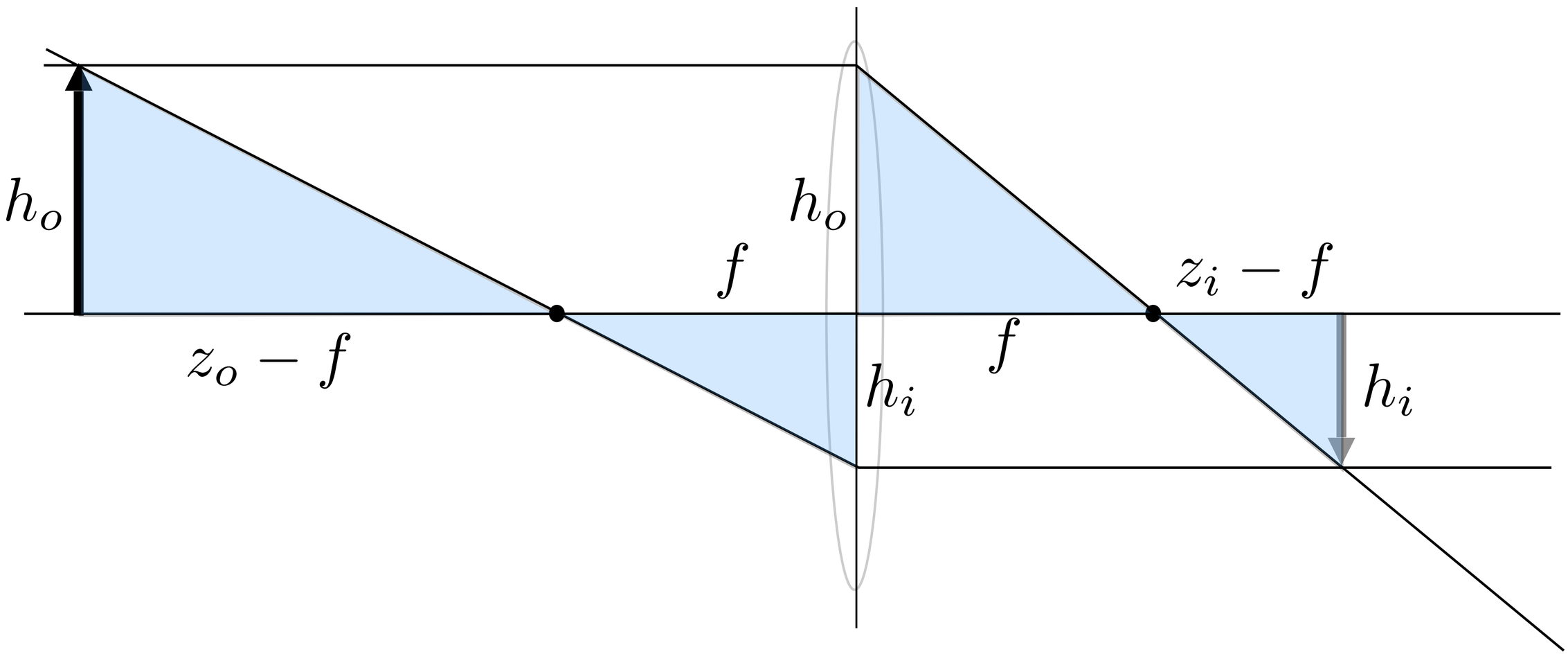

$$\frac{h_o}{z_o - f} = \frac{h_i}{f} \qquad \frac{h_o}{f} = \frac{h_i}{z_i - f}$$

Gauss' Ray Tracing Construction

$$\frac{h_o}{z_o - f} = \frac{h_i}{f} \qquad \frac{h_o}{f} = \frac{h_i}{z_i - f}$$

$$\frac{h_o}{h_i} = \frac{z_o - f}{f} \qquad \frac{h_o}{h_i} = \frac{f}{z_i - f}$$

$$\frac{z_o - f}{f} = \frac{f}{z_i - f}$$

Object / image heights factor out - applies to all rays

$$(z_o - f)(z_i - f) = f^2$$

Newtonian Thin Lens Equation

$$z_o z_i - (z_o + z_i)f + f^2 = f^2$$

$$z_o z_i = (z_o + z_i)f$$

$$\frac{1}{f} = \frac{1}{z_i} + \frac{1}{z_o}$$

Gaussian Thin Lens Equation

The Thin Lens Equation

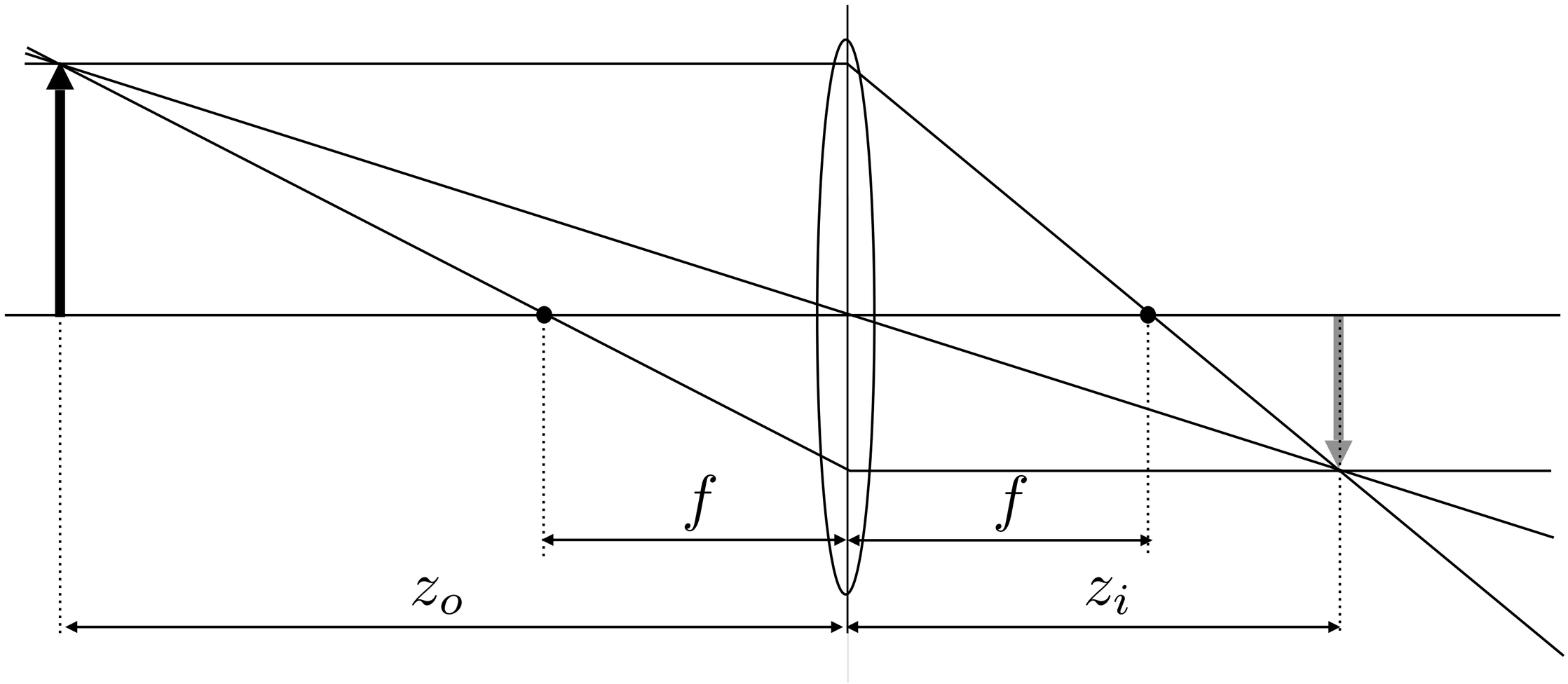

$$\boxed{\frac{1}{f} = \frac{1}{z_i} + \frac{1}{z_o}}$$

Changing the Focus Distance

$$\frac{1}{f} = \frac{1}{z_i} + \frac{1}{z_o}$$

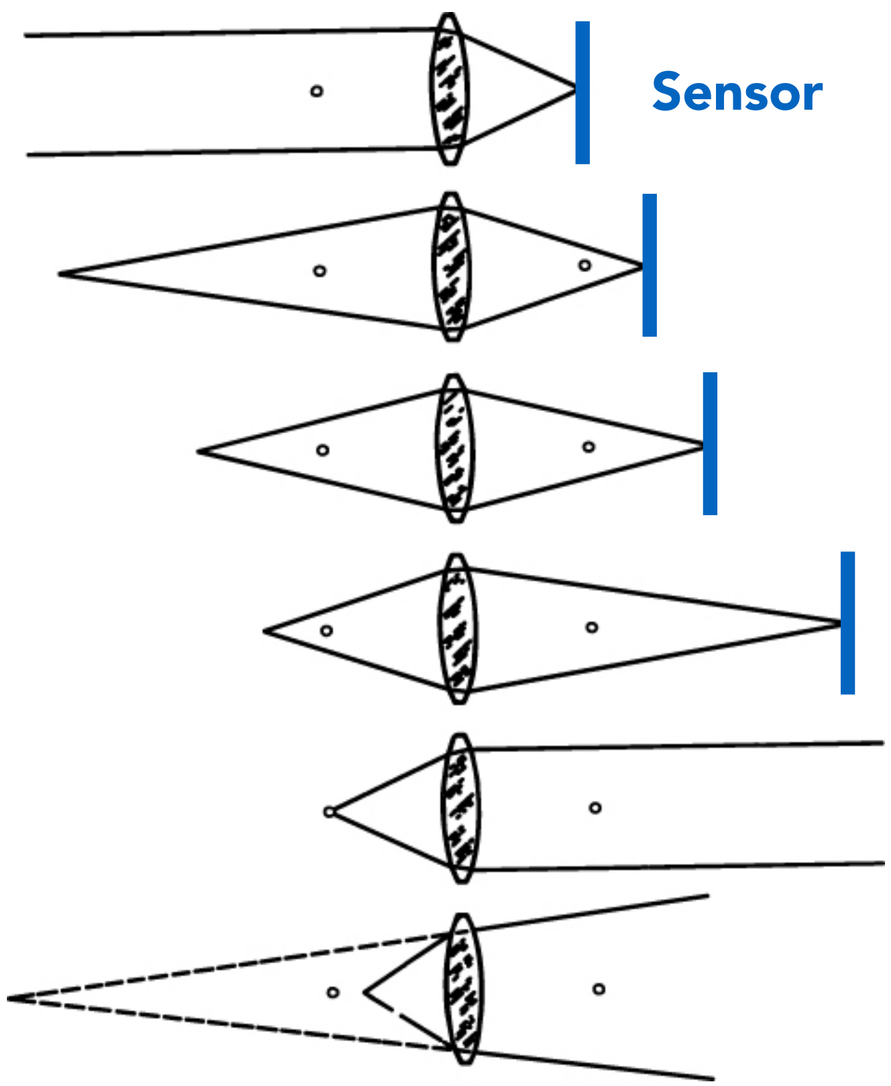

- z_i and z_o are called <u>conjugate points</u>
- To focus on objects at different distances, move the sensor relative to the lens
- For $z_i < z_o$ the object is larger than the image
- At $z_i = z_o$ we have 1:1 macro imaging
- For $z_i > z_o$ the image is larger than the object (magnified)
- Can't focus on objects closer than the lens' focal length

Magnification

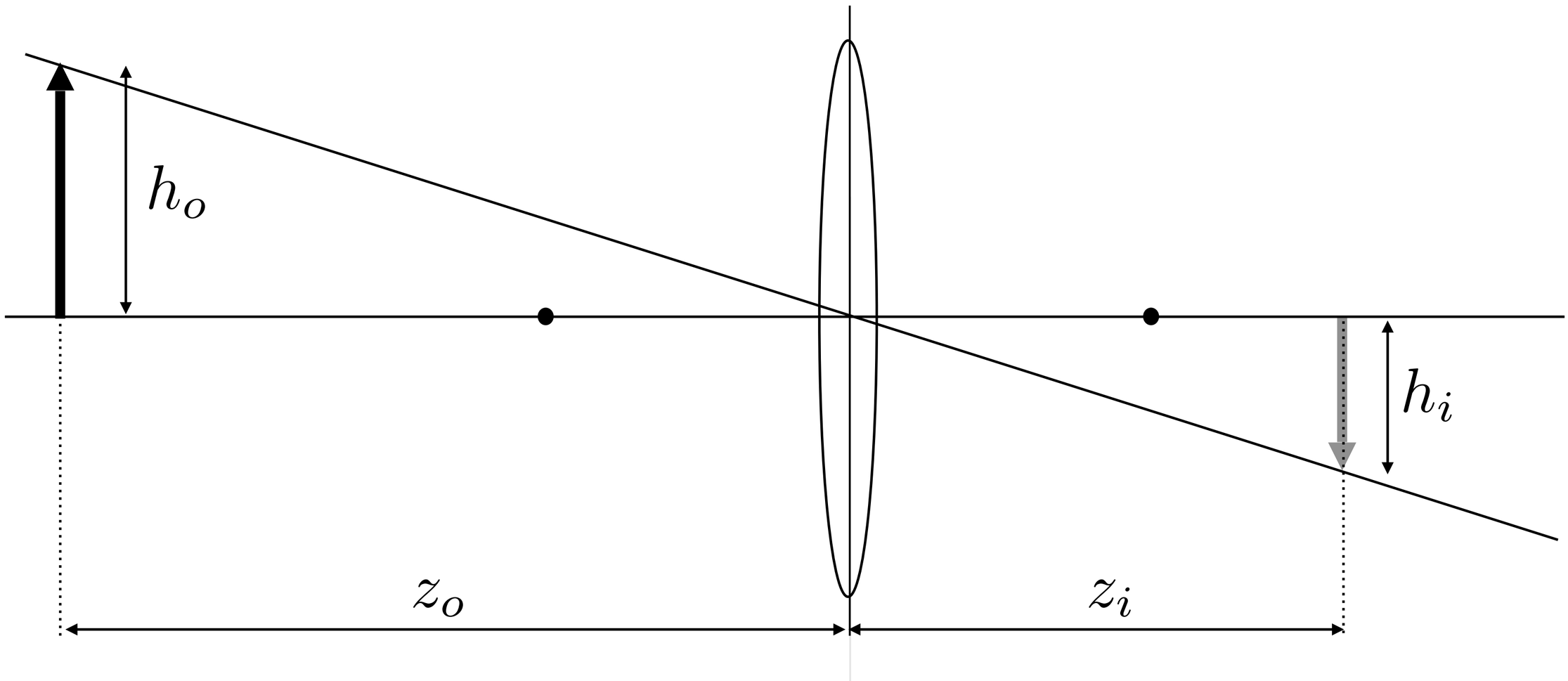

$$m = \frac{h_i}{h_o} = \frac{z_i}{z_o}$$

Magnification Example – Focus at Infinity

$$\frac{1}{f} = \frac{1}{z_i} + \frac{1}{z_o} \qquad m = \frac{z_i}{z_o}$$

If focused on a distant mountain

- $z_o \approx \infty$, so $z_i = f$
- sensor at focal point
- magnification ≈ 0

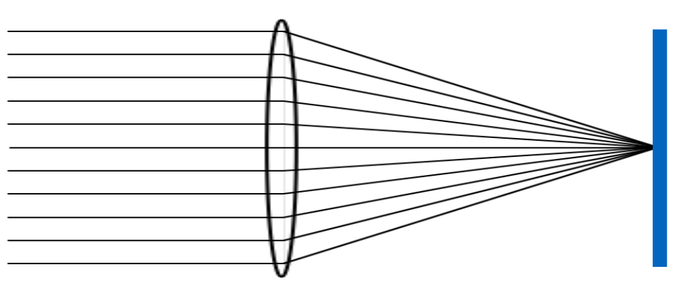

Magnification Example – Focus at 1:1 Macro

$$\frac{1}{f} = \frac{1}{z_i} + \frac{1}{z_o} \qquad m = \frac{z_i}{z_o}$$

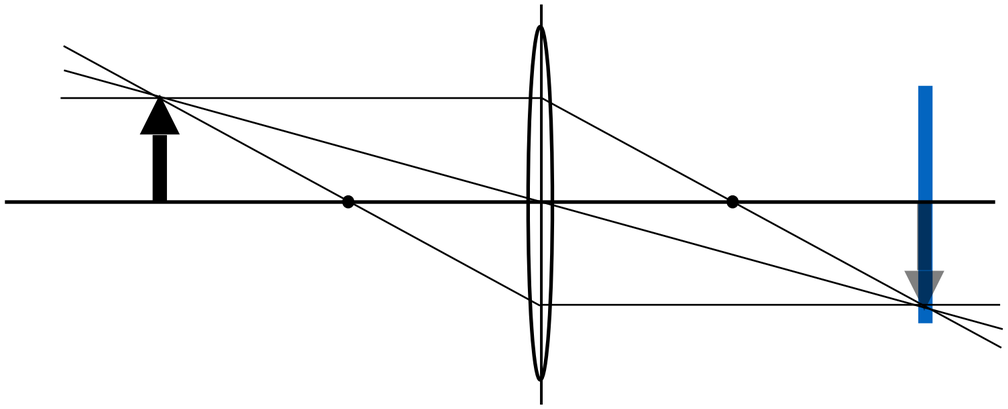

What configuration do we need to achieve a magnification of 1 (i.e. image and object the same size, a.k.a. 1:1 macro)?

- Need $z_i = z_o$, so $z_i = z_o = 2f$ —- sensor at twice focal length
- In 1:1 imaging, if the sensor is 36 mm wide, an object 36 mm wide will fill the frame

Thin Lens Demonstration

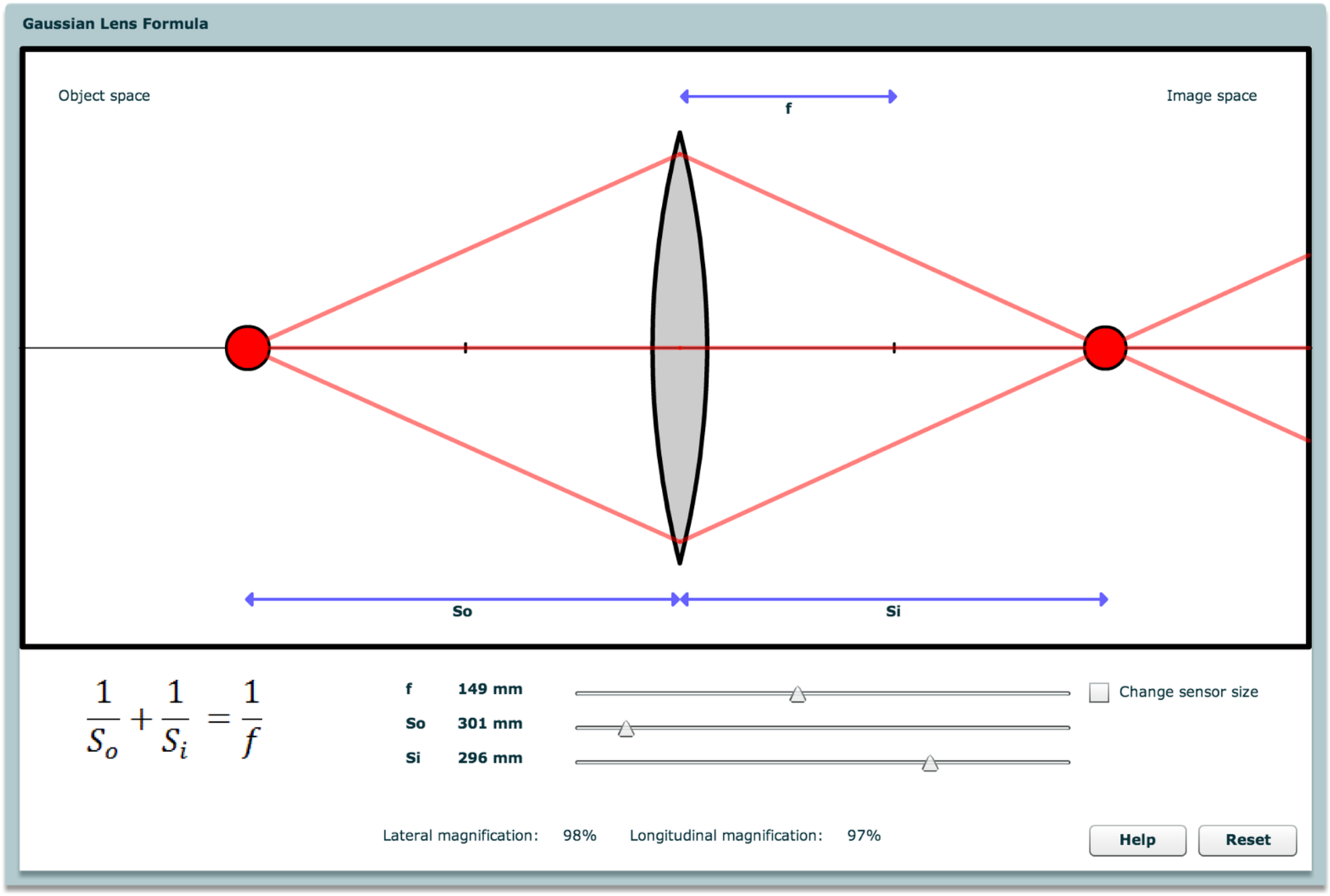

http://graphics.stanford.edu/courses/cs178-10/applets/gaussian.html

Thin Lens Demonstration Observations

3D image of object is:

- Compressed in depth for low magnification
- 1:1 in 3D for unit magnification
- Stretched in depth for high magnification

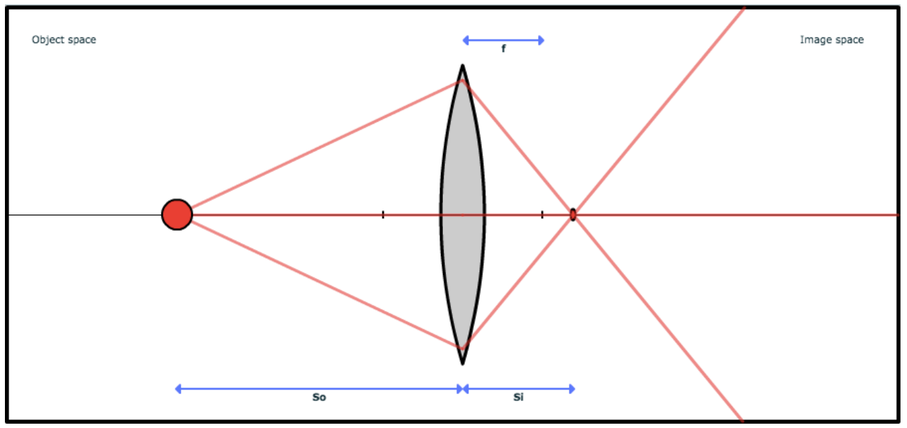

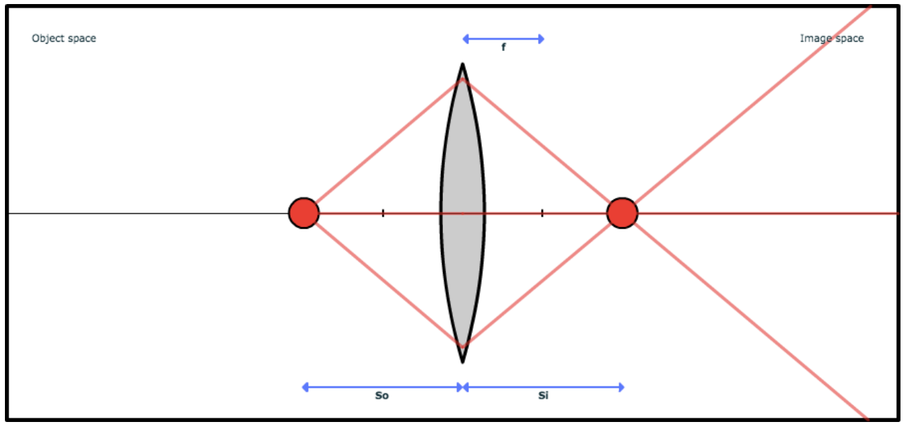

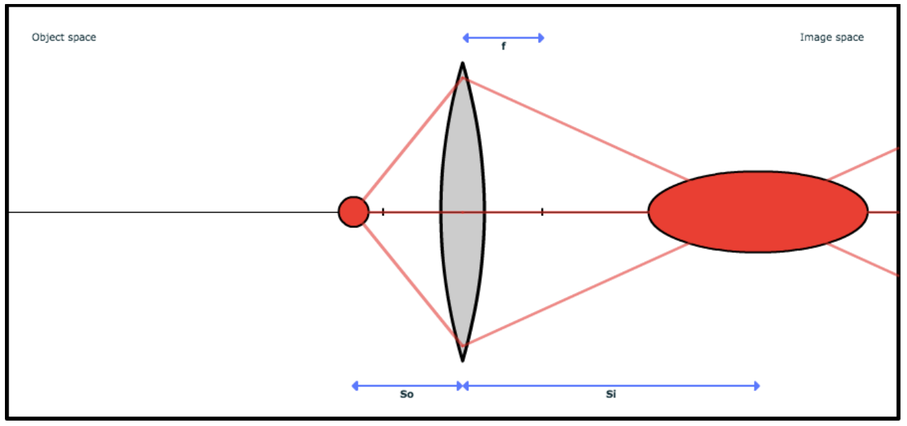

Defocus Blur

Circle of Confusion

Circle of Confusion

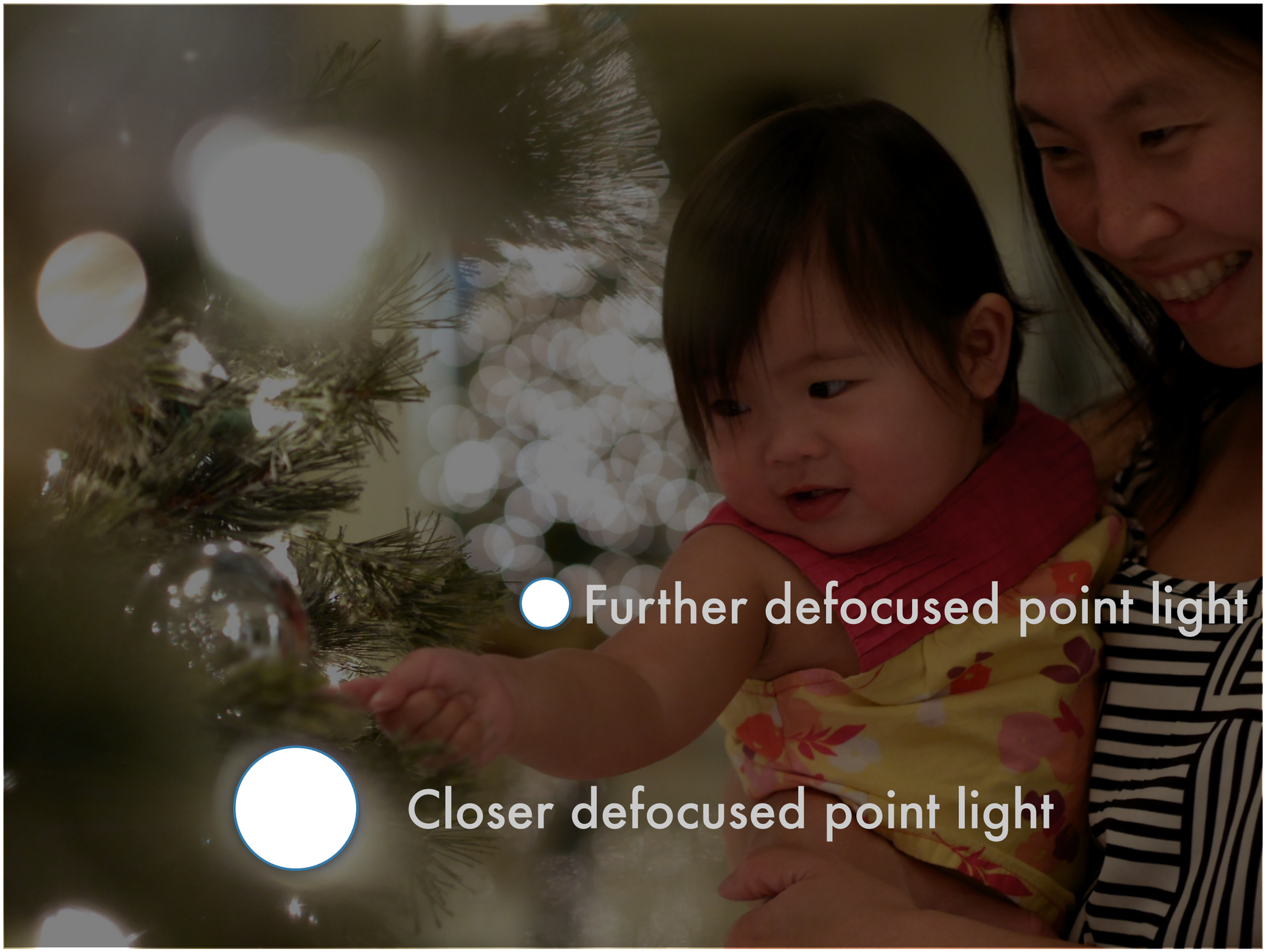

Circle of Confusion

Size of blur kernel depends on depth from focal plane.
Only see the blur kernel itself if you have a point light. Why?

Circle of Confusion

Computing Circle of Confusion Diameter (C)

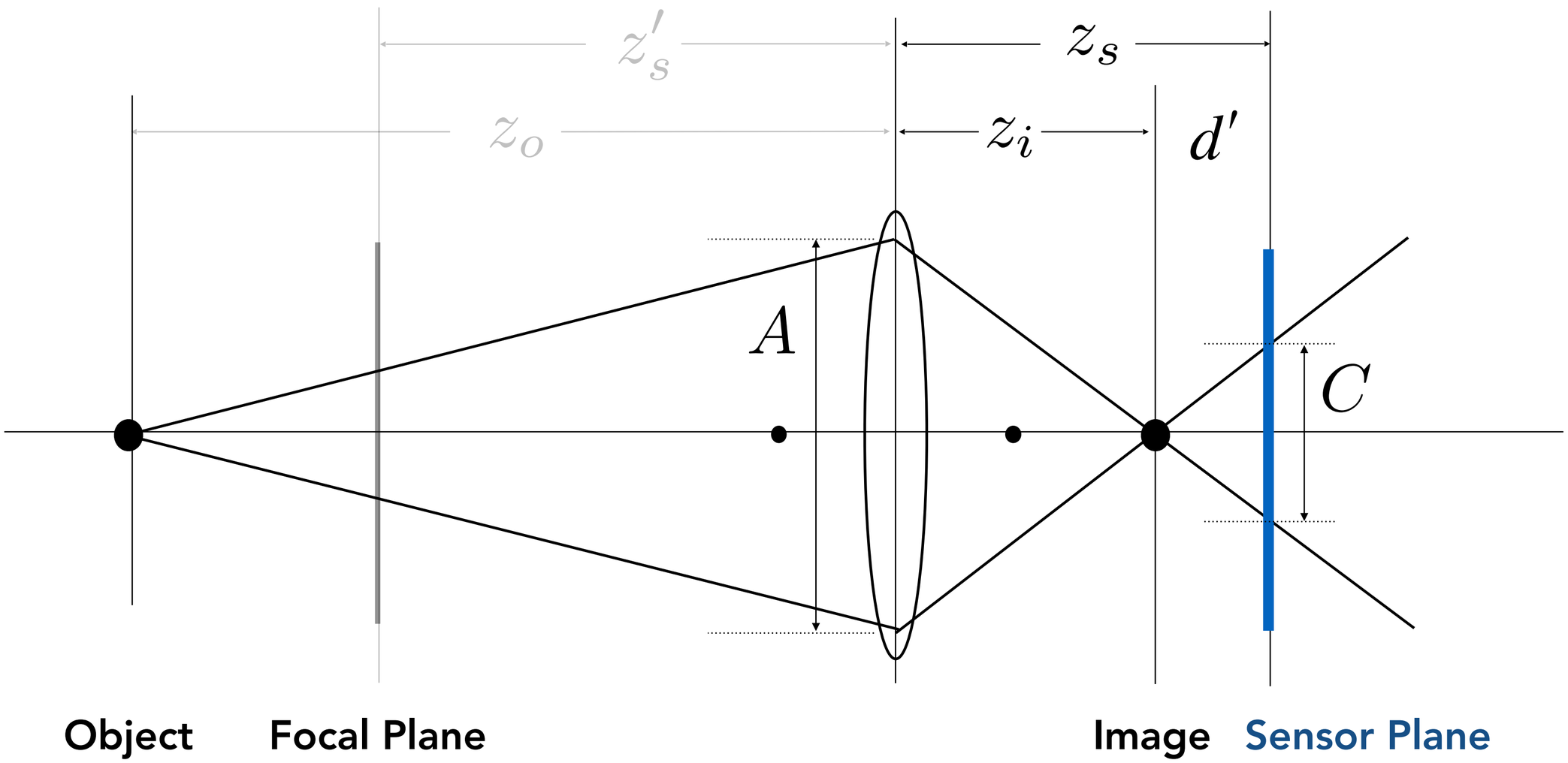

Circle of confusion is proportional to the size of the aperture

$$\frac{C}{A} = \frac{d'}{z_i} = \frac{|z_s - z_i|}{z_i}$$

Circle of Confusion – Example

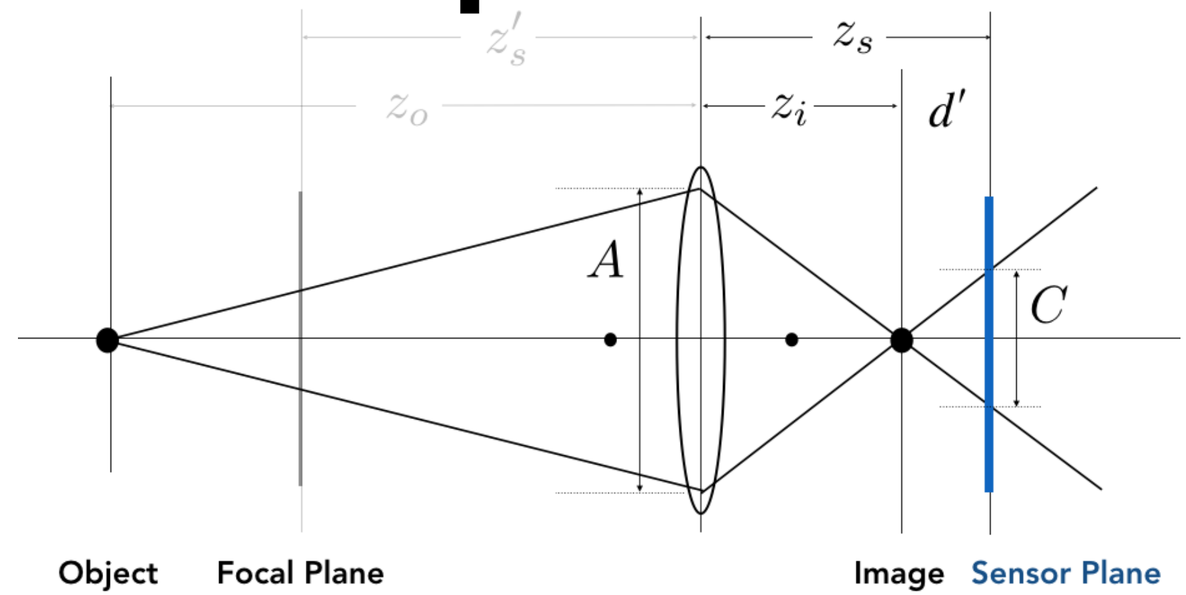

50mm f/2 lens
Full frame sensor (36x24mm)
Focus: 1 meter
Background: 10 meter
Foreground: 0.3 meter

$$A = 50\text{mm}/2 = 25\text{mm}$$

$$z_s = \frac{1}{1/50 - 1/1000} \approx 52.63\text{mm}$$

$$C = A\frac{|z_s - z_i|}{z_i}$$

$$\text{Background: } z_i = \frac{1}{1/50 - 1/10{,}000} \approx 50.25\text{mm}$$

$$C = A|z_s - z_i|/z_i = 1.18\text{mm}$$

~65 pixels on HD TV

$$\text{Foreground: } z_i = \frac{1}{1/50 - 1/300} \approx 55.56\text{mm}$$

$$C = A|z_s - z_i|/z_i = 3.07\text{mm}$$

~169 pixels on HD TV

Lens's F-Number vs F-Number for Photo

A lens's F-Number is the maximum for that lens

- E.g. 50 mm F/1.4 is a high-quality telephoto lens
  - Maximum aperture is 50/1.4 = 36 mm diameter

But for an individual photo, the lens aperture may be "stopped down" to a smaller size

- E.g. 50 mm F/1.4 lens stopped down to F/4
  - Aperture is closed down with an iris to 50/4 = 12.5 mm

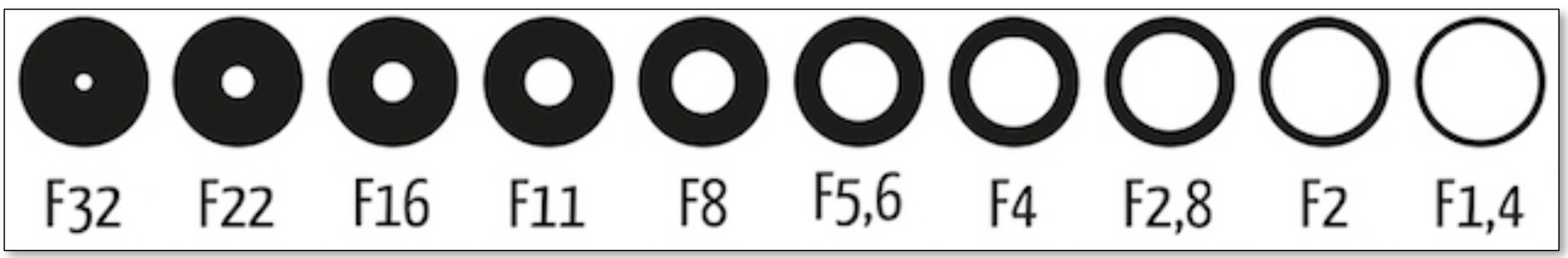

Example F-Number Calculations

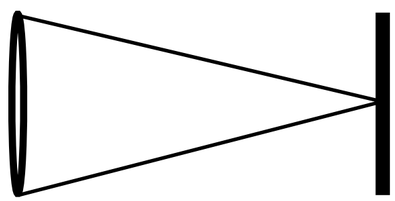

$$D = 50\,\mathrm{mm}$$
$$f = 100\,\mathrm{mm}$$
$$N = f/D = 2$$

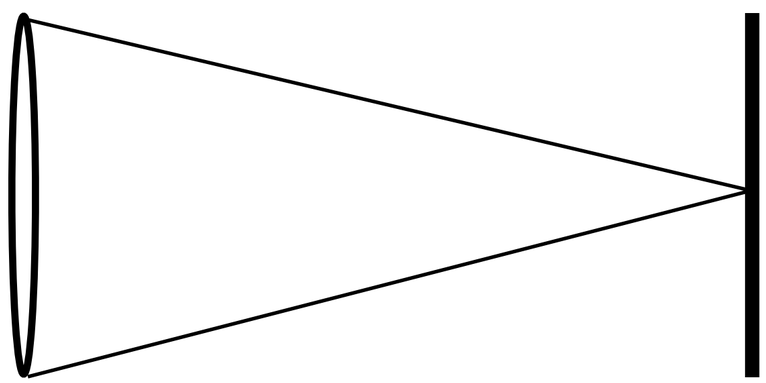

$$D = 100\,\mathrm{mm}$$
$$f = 200\,\mathrm{mm}$$
$$N = f/D = 2$$

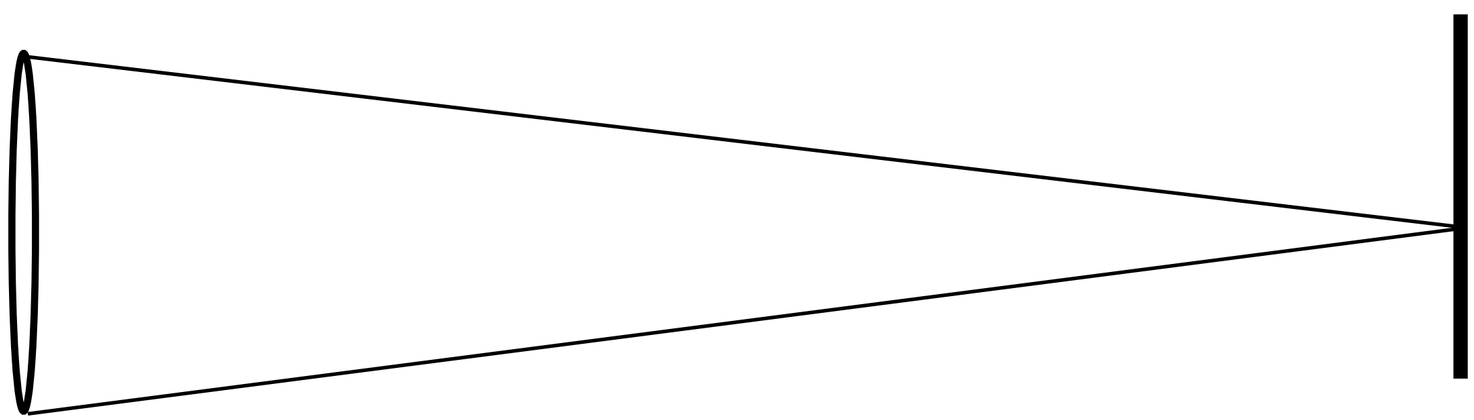

$$D = 100\,\mathrm{mm}$$
$$f = 400\,\mathrm{mm}$$
$$N = f/D = 4$$

Size of Circle of Confusion is Inversely Proportional to F-Number for Photo

R. Berdan, canadiannaturephotographer.com

$$C = A\frac{|z_s - z_i|}{z_i} = \frac{f}{N}\frac{|z_s - z_i|}{z_i}$$

Exposure Tradeoffs

Depth of Field vs Motion Blur

Constant Exposure: Depth of Field vs Motion Blur

f / 4
1/125 sec

f / 11
1/15 sec

f / 32
1/2 sec

- Photographers must trade off depth of field and motion blur for moving subjects

Shallow Depth of Field Can Create a Stronger Image

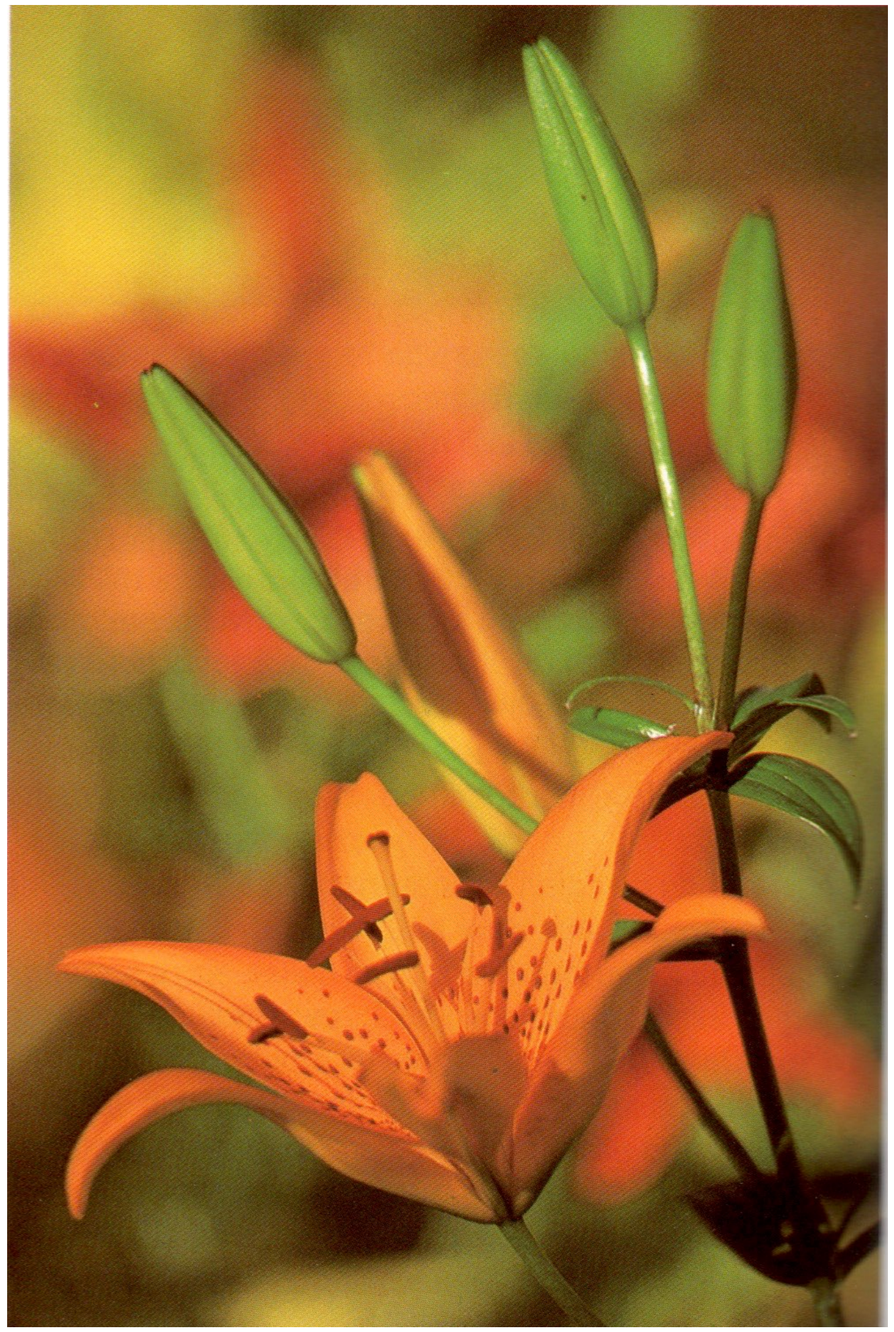

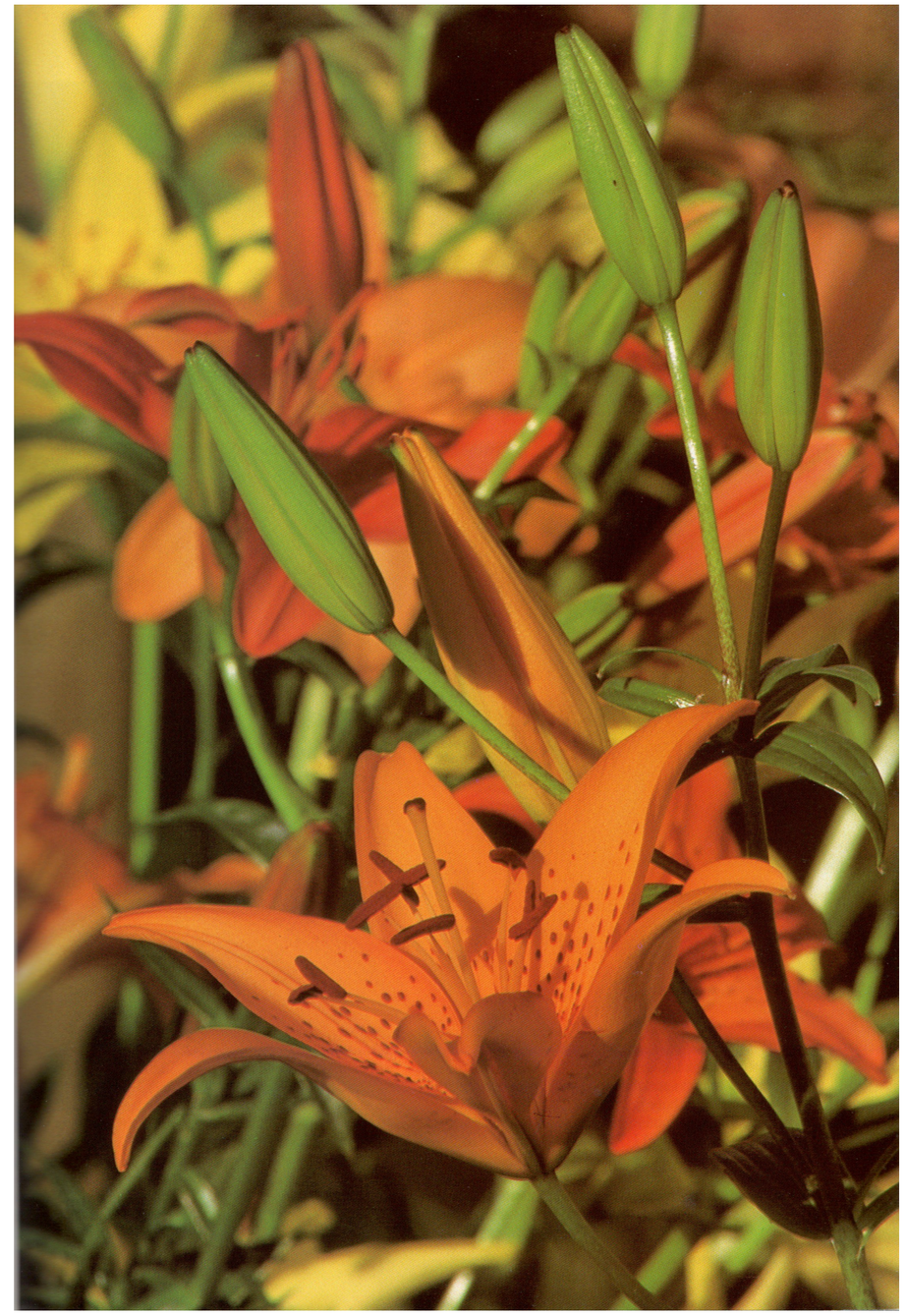

From Peterson, Understanding Exposure
200mm, f/4, 1/1000 (left) and f/11, 1/125 (right)

Motion Blur Can Help Tell The Story

From Peterson, Understanding Exposure
1/60, f/5.6, 180mm

Depth of Field

Depth of Field

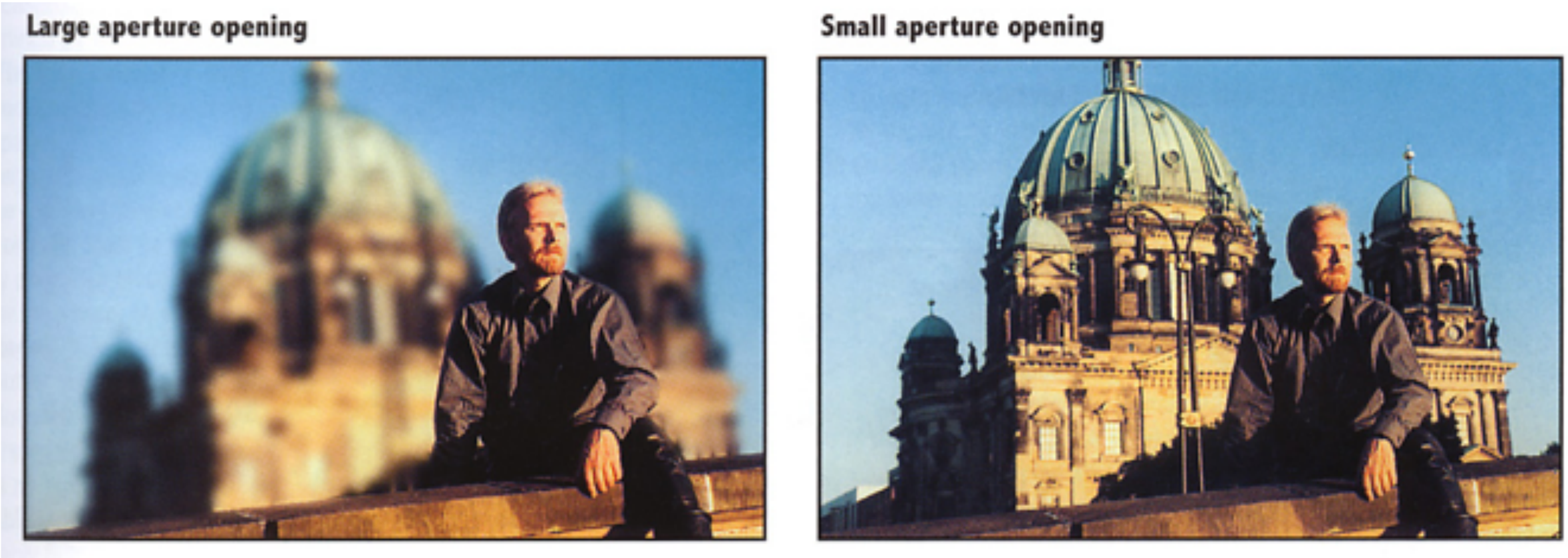

From London and Upton

- Depth of field is the range of object depths that are rendered with acceptable sharpness in an image

Circle of Confusion for Depth of Field

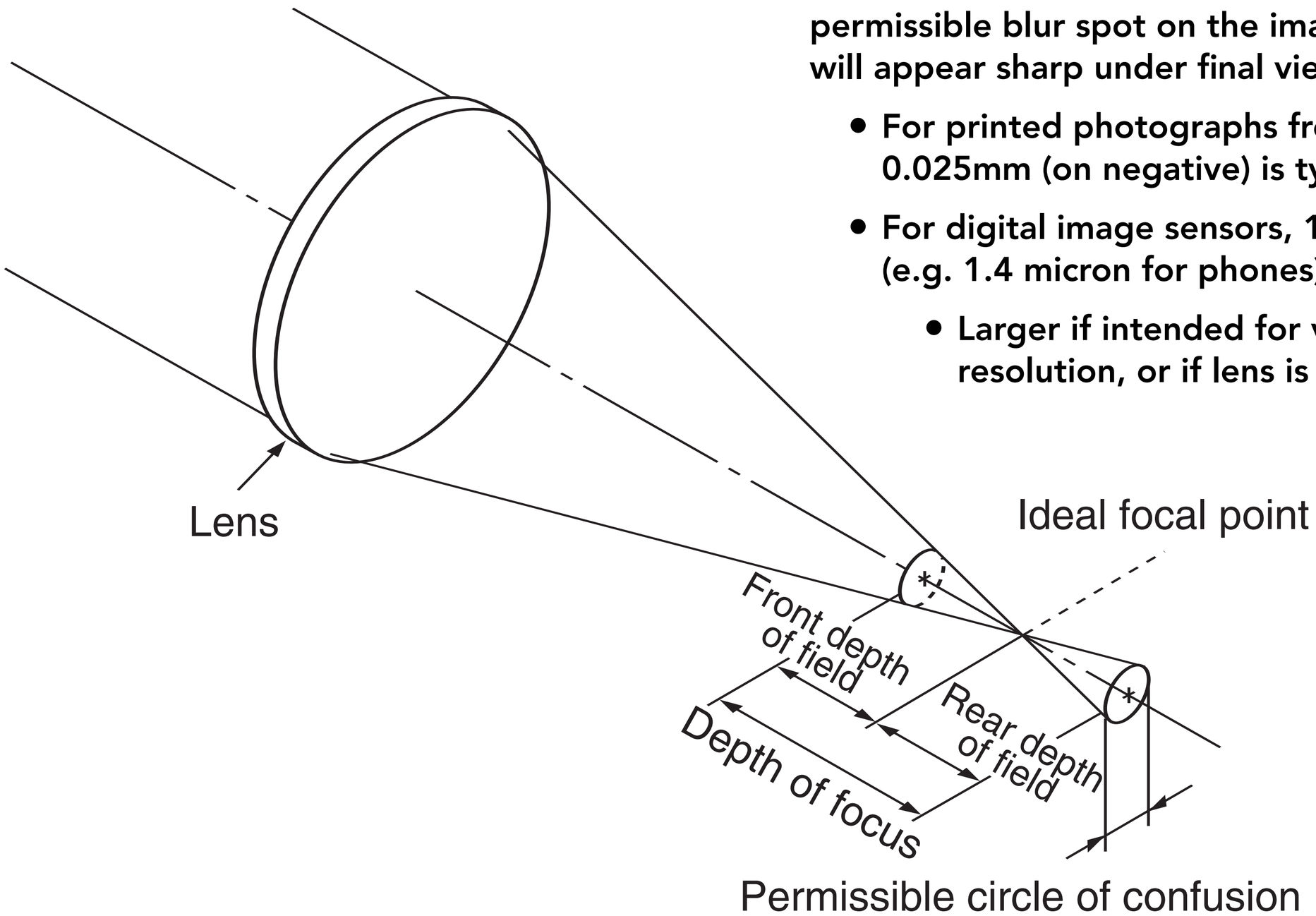

Set circle of confusion as the maximum permissible blur spot on the image plane that will appear sharp under final viewing conditions

- For printed photographs from 35mm film, 0.025mm (on negative) is typical
- For digital image sensors, 1 pixel is typical (e.g. 1.4 micron for phones)
    - Larger if intended for viewing at web resolution, or if lens is poor

[Canon, EF Lens Work III]

Depth of Field

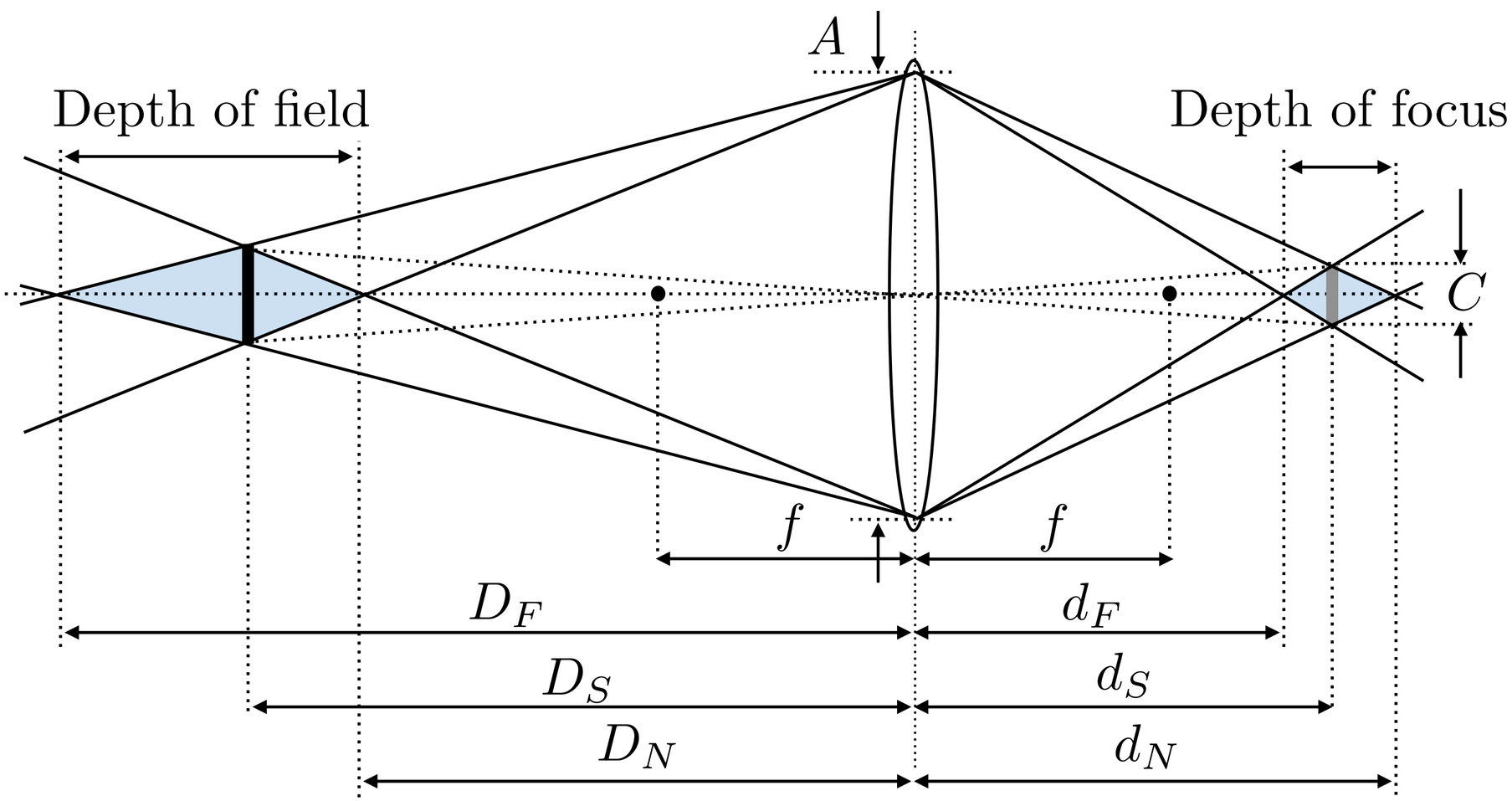

$$\frac{d_N - d_S}{d_N} = \frac{C}{A}$$

$$\frac{d_S - d_F}{d_F} = \frac{C}{A}$$

$$N = \frac{f}{A}$$

$$\frac{1}{D_F} + \frac{1}{d_F} = \frac{1}{f}$$

$$\frac{1}{D_S} + \frac{1}{d_S} = \frac{1}{f}$$

$$\frac{1}{D_N} + \frac{1}{d_N} = \frac{1}{f}$$

$$\mathrm{DOF} = D_F - D_N$$

$$D_F = \frac{D_S f^2}{f^2 - NC(D_S - f)} \qquad D_N = \frac{D_S f^2}{f^2 + NC(D_S - f)}$$

DOF Demonstration

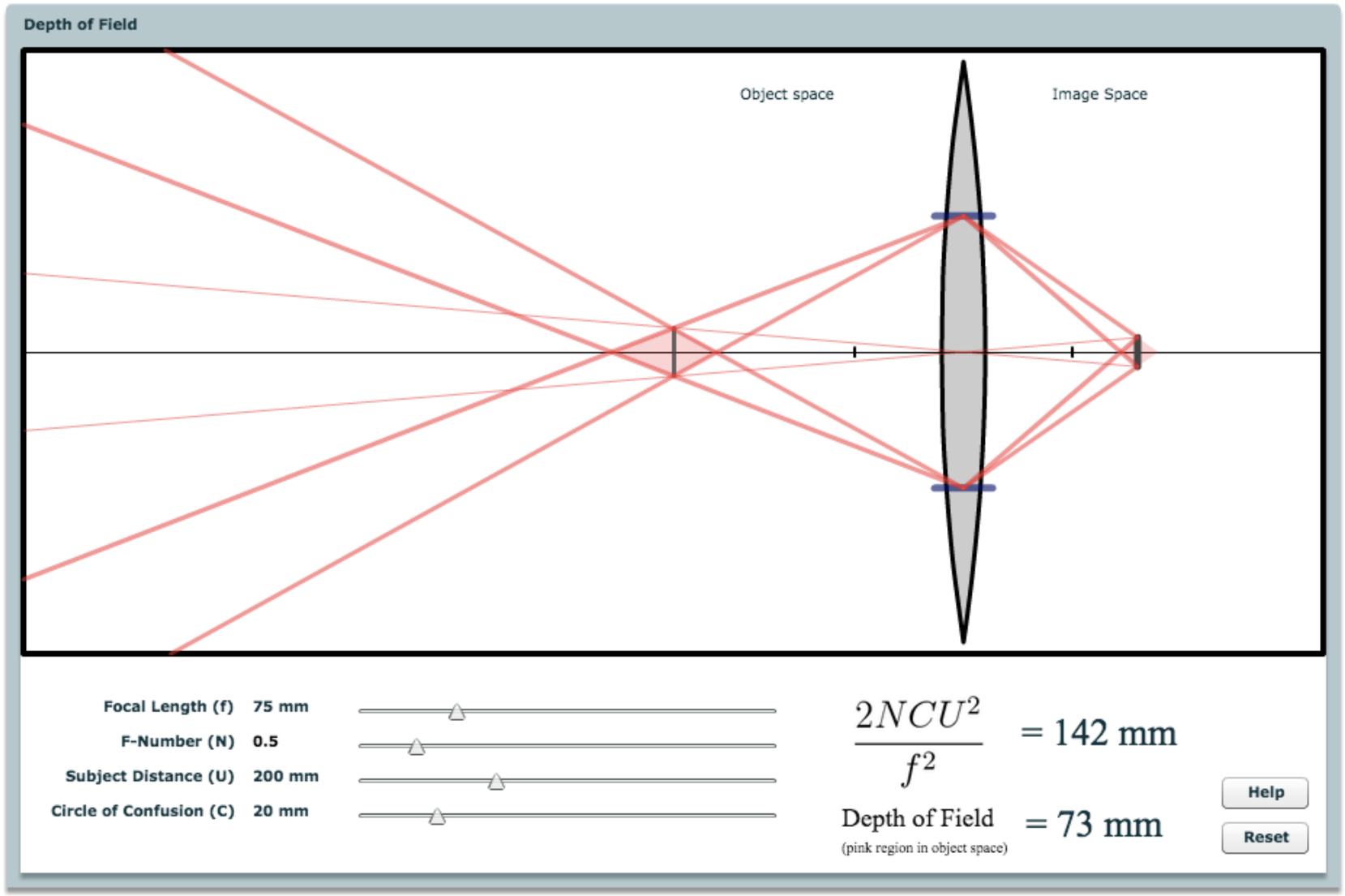

http://graphics.stanford.edu/courses/cs178/applets/dof.html

Ray Tracing Ideal Thin Lenses

Example of Rendering with Lens Focus

Credit: Bertrand Benoit. “Sweet Feast,” 2009. [Blender /VRay]

Example of Rendering with Lens Focus

Credit: Giuseppe Albergo. “Colibri” [Blender]

Example of Rendering with Lens Focus

Pharr and Humphreys

Ray Tracing for Defocus Blur (Thin Lens)

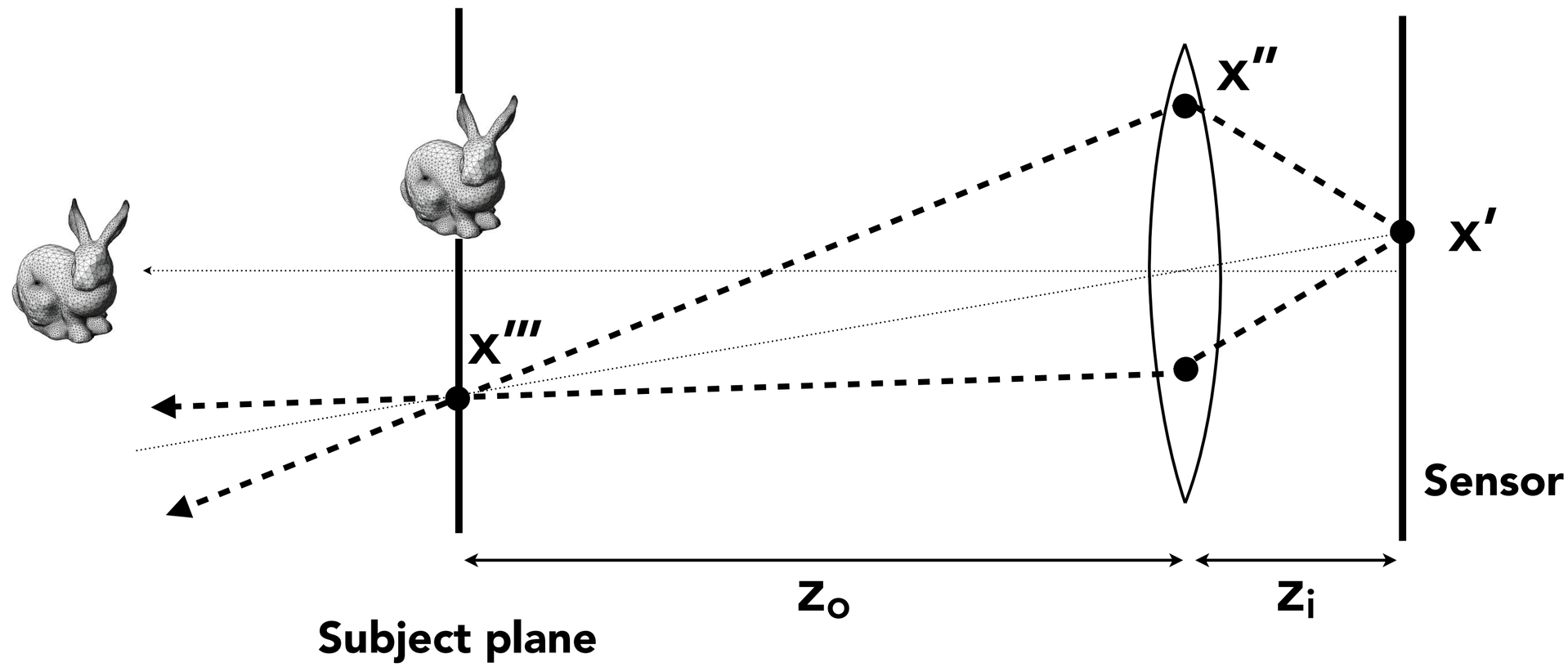

Setup:

- Choose sensor size, lens focal length and aperture size
- Choose depth of subject of interest z_o
  - Calculate corresponding depth of sensor z_i from thin lens equation (focusing)

Ray Tracing for Defocus Blur (Thin Lens)

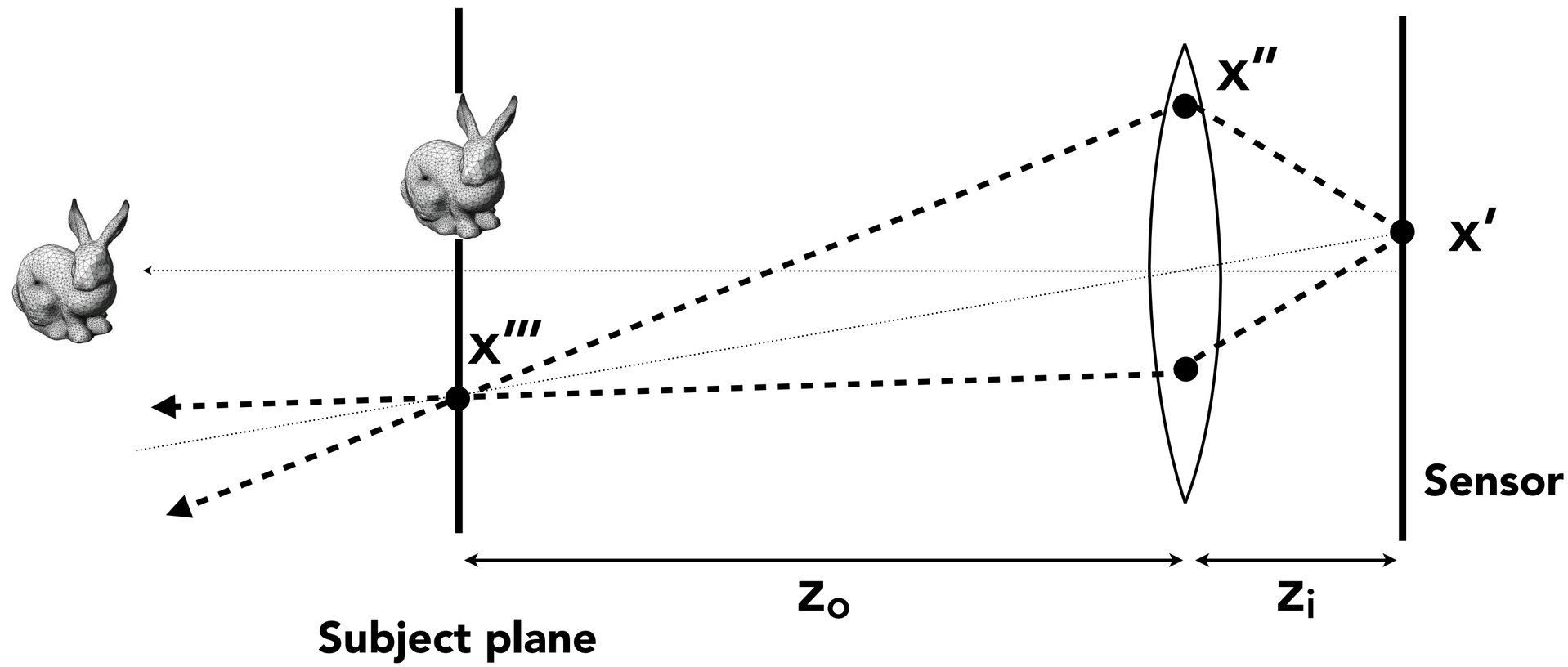

To compute value of pixel at position x′ by Monte Carlo integration:

- Select random points x″ on lens plane
- Rays pass from point x′ on image plane z_i through points x″ on lens
- Each ray passes through conjugate point x‴ on the plane of focus z_o
  - Can determine x‴ from Gauss' ray diagram
  - So just trace ray from x″ to x‴
- Estimate radiance on rays using path-tracing, and sum over all points x″

Example of Rendering with Lens Focus

Pharr and Humphreys

Bokeh

Bokeh

Bokeh is the shape and quality of out-of-focus blur

- For small, out-of-focus lights, bokeh takes on the shape of the lens aperture

M Yashna, flickr, 40mm f/3.0

Bokeh

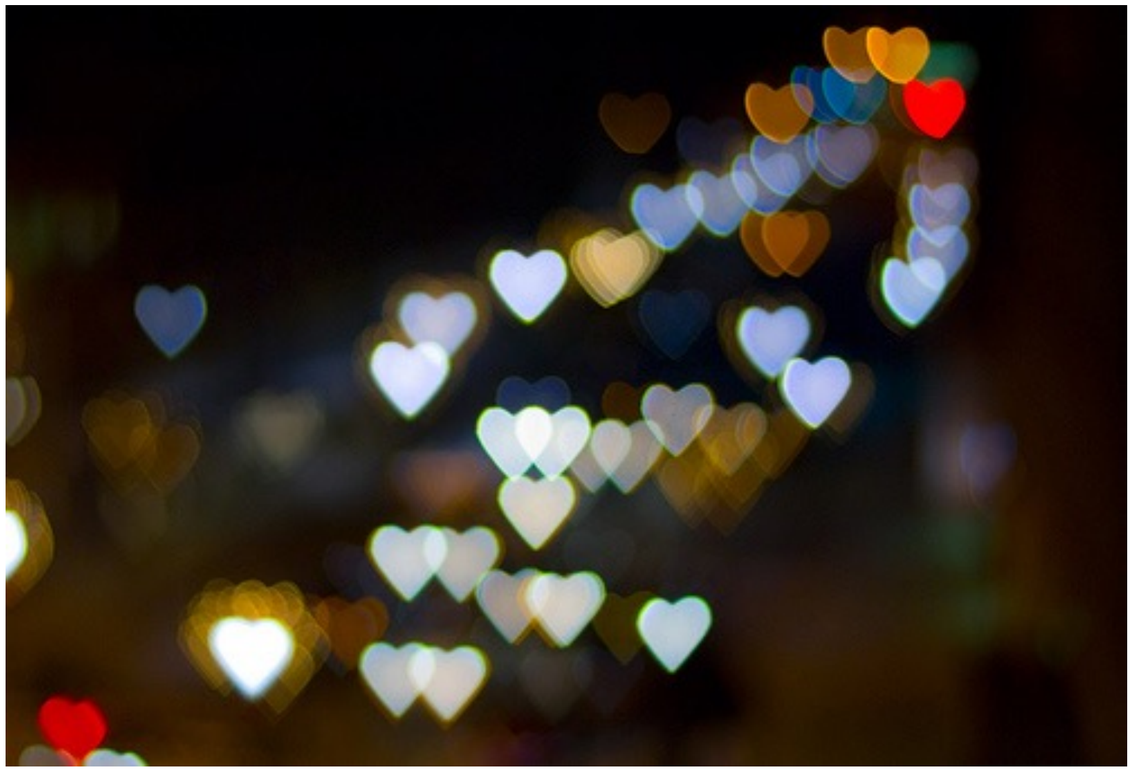

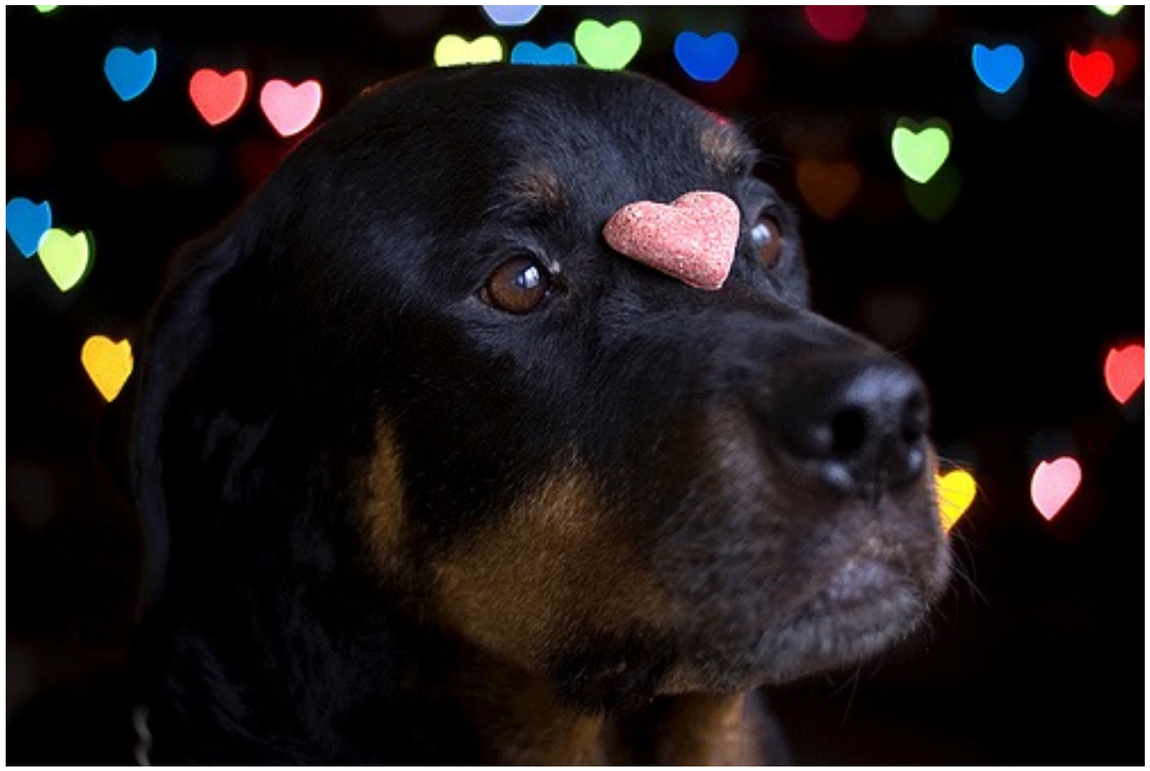

diyphotography.net

Heart-shaped bokeh?

Bokeh

Dino Quinzani, Leica Noctilux 50mm, f/0.95

Why does the bokeh vary across the image?

Real Compound Lenses

Modern Lens Designs Are Highly Complex

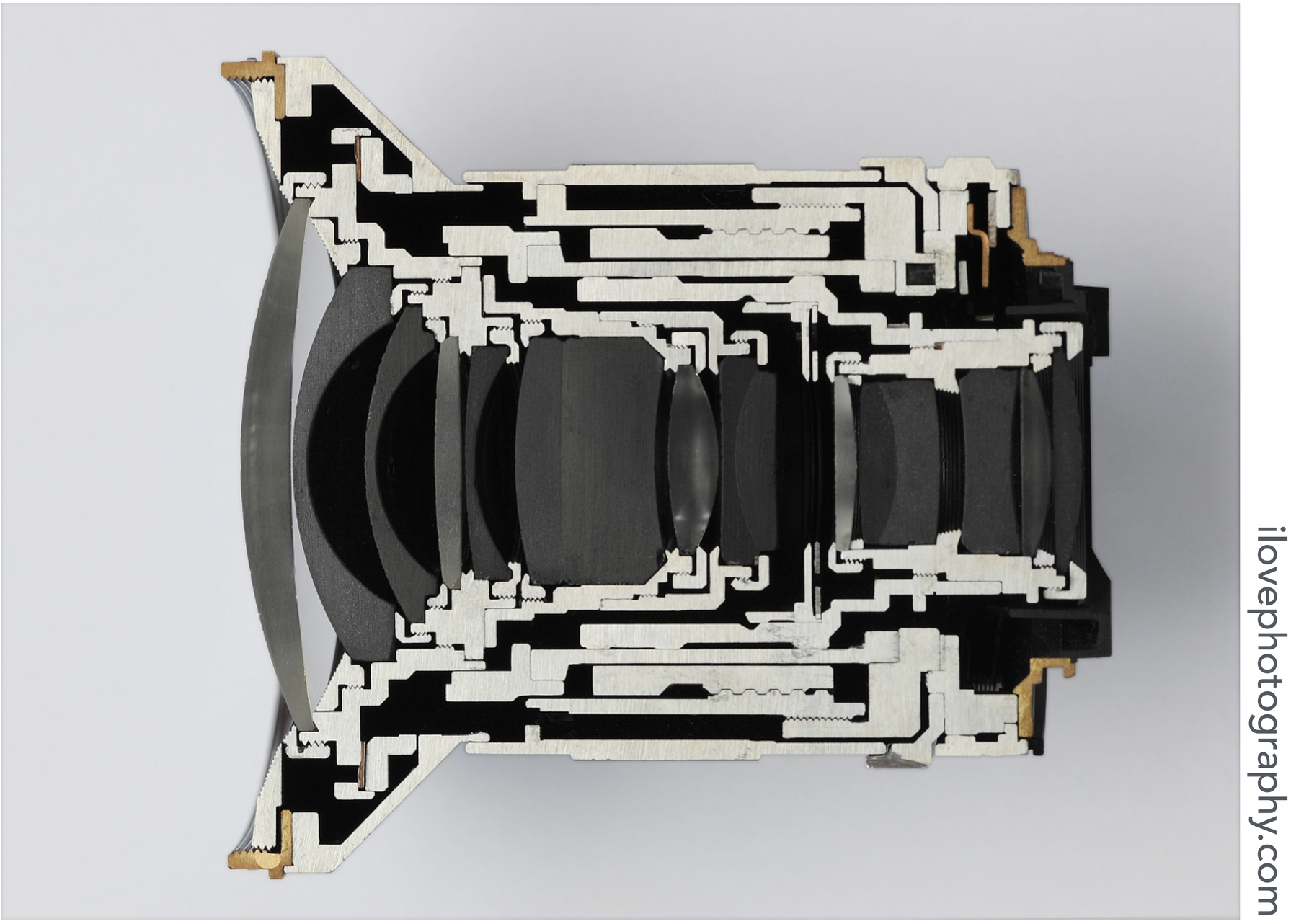

Photographic lens cross section

Modern Lens Designs Are Highly Complex

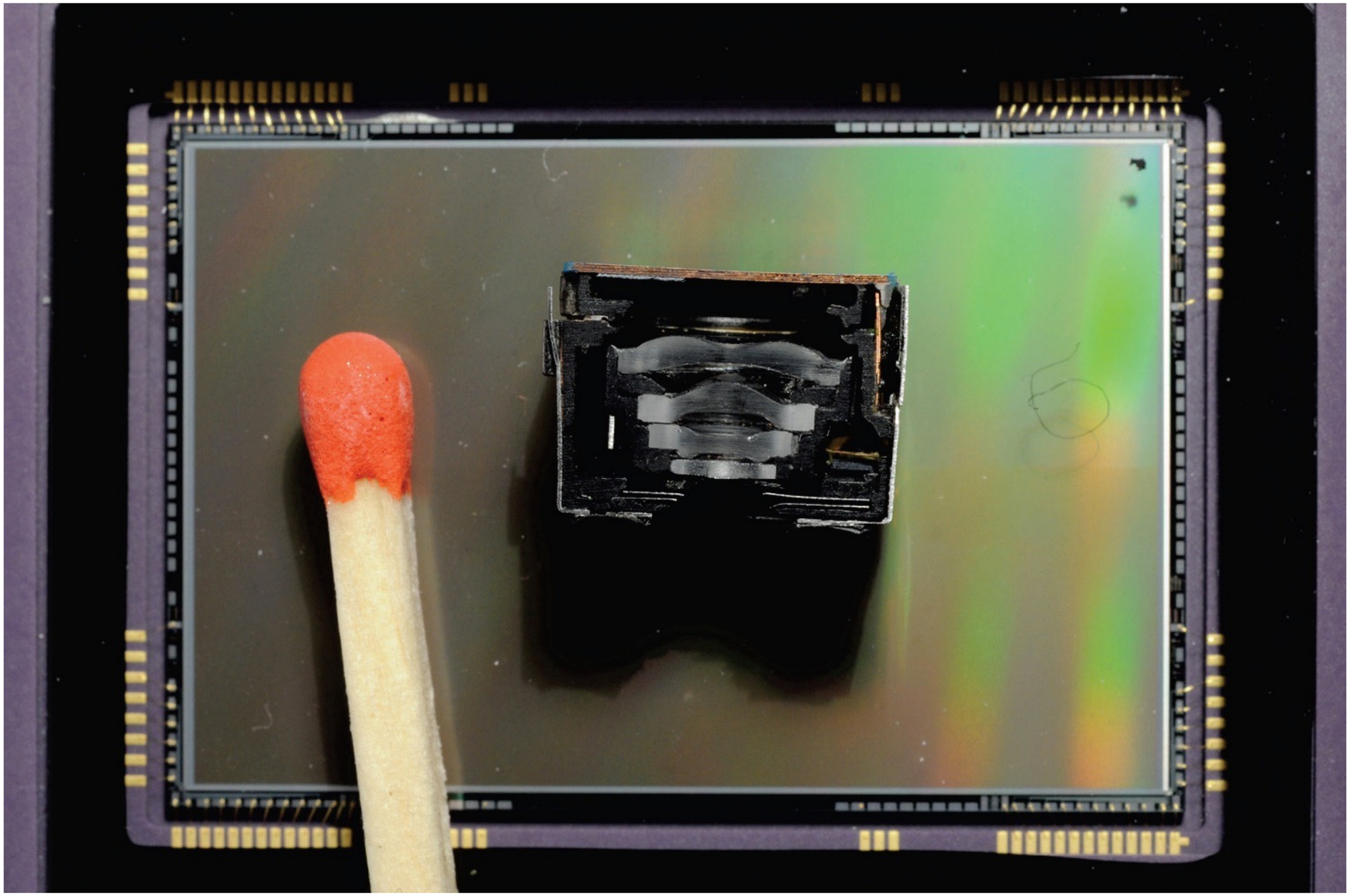

4 element mobile phone lens (on 24x36mm sensor)

Modern Lens Designs Are Highly Complex

[Apple]

Modern Lens Designs Are Highly Complex

Zeiss flickr.com account

Microscope objective

Recall: Snell's Law of Refraction

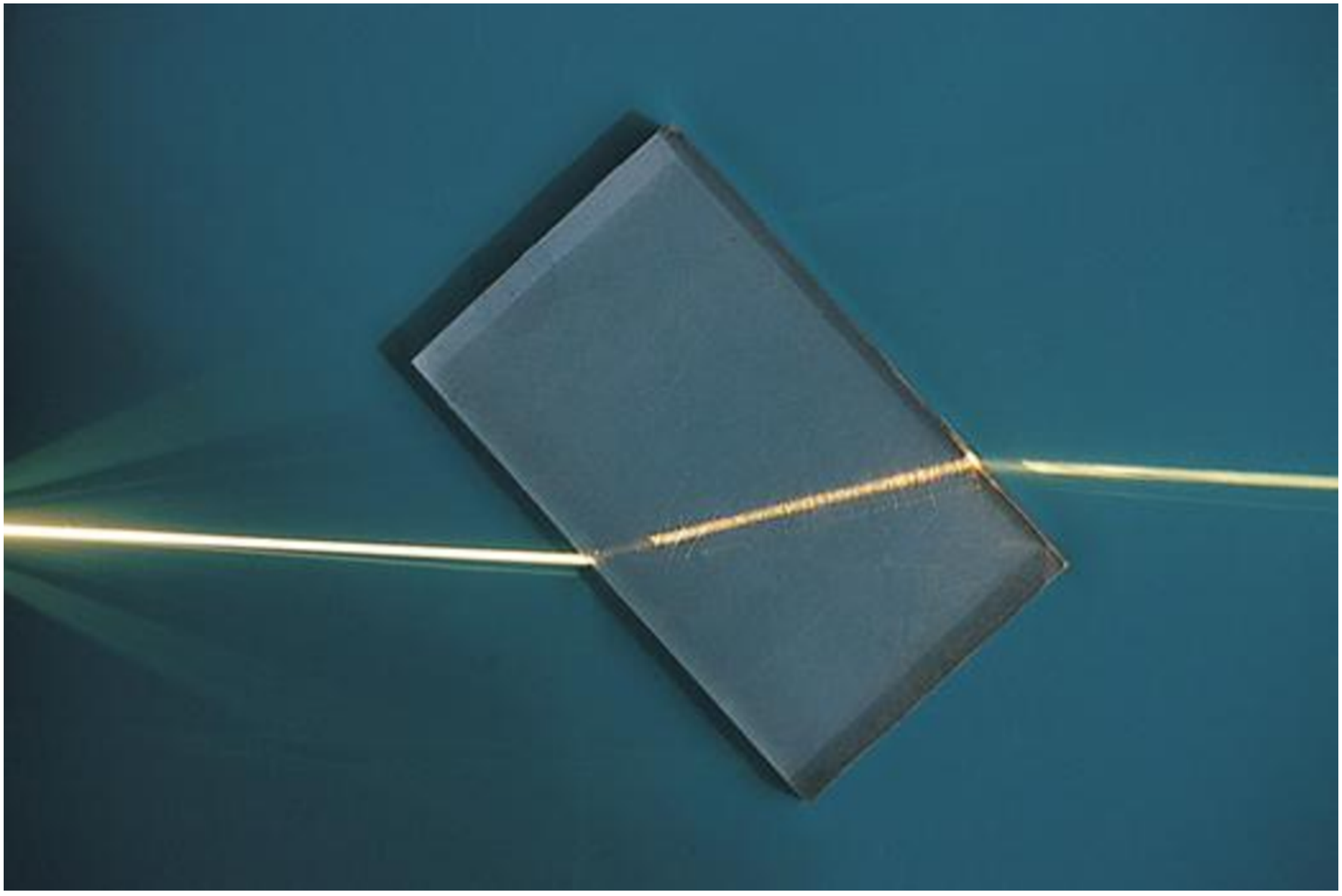

$$\eta_i \sin\theta_i = \eta_t \sin\theta_t$$

Real Refraction Through A Lens Is Not Ideal – Aberrations

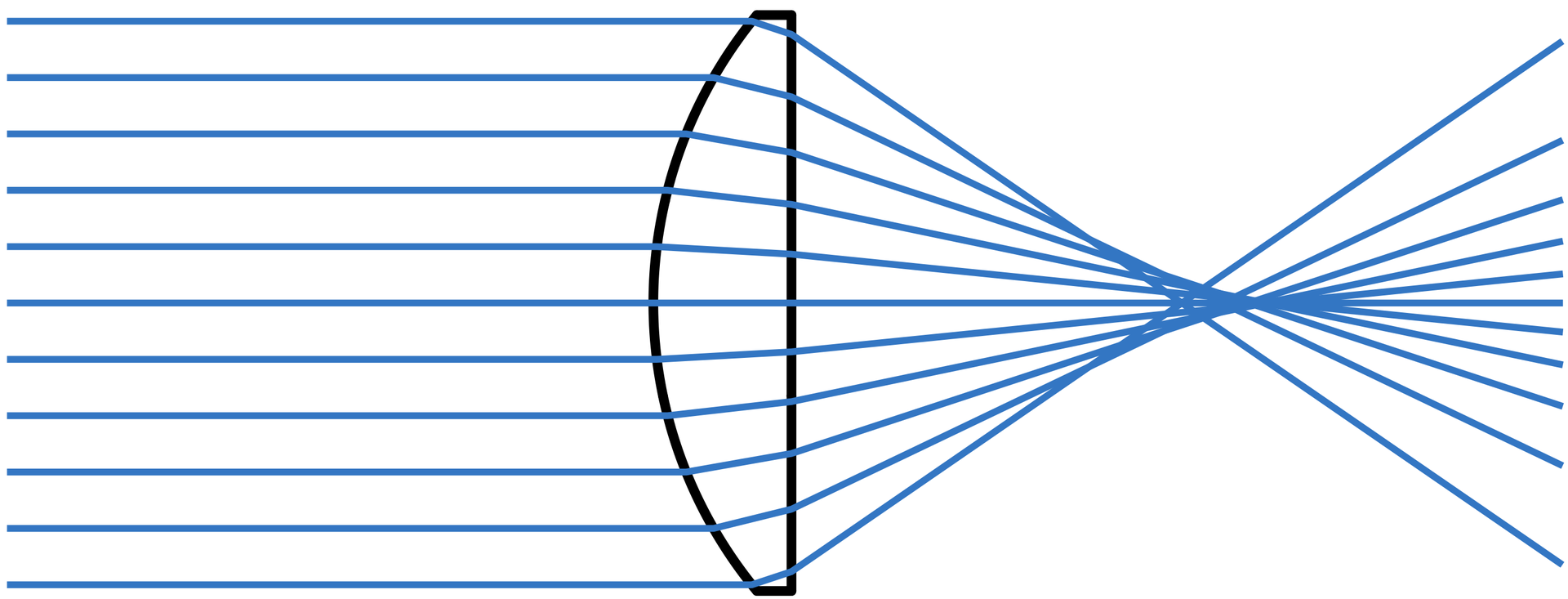

Real plano-convex lens (spherical surface shape).
Lens does not converge rays to a point anywhere.

Real Lenses vs Ideal Thin Lenses

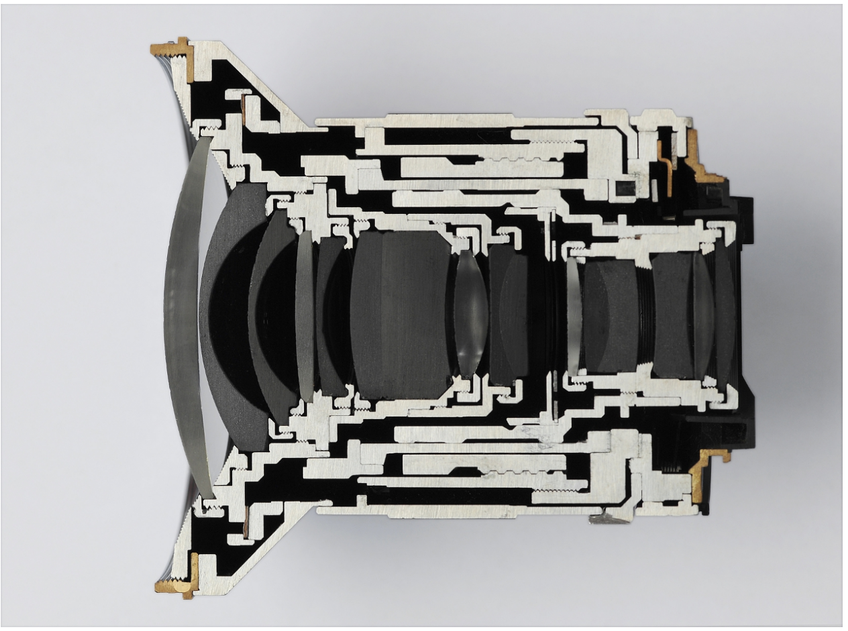

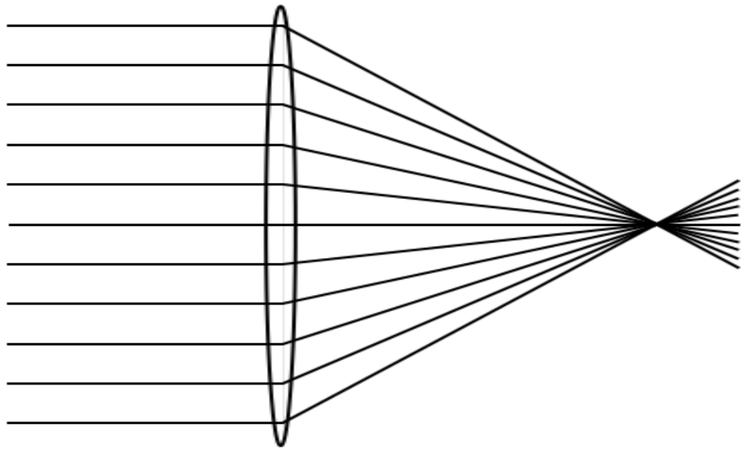

- Real optical system
- Multiple physical elements in compound design
- Optical aberrations prevent rays from converging perfectly

- Theoretical abstraction
- Assume all rays refract at a plane & converge to a point
- Quick and intuitive calculation of main imaging effects

Example Lens Formula: Double Gauss

Data from W. Smith, Modern Lens Design, p 312

Radius (mm)	Thick (mm)	n_d	V-no	Aperture (mm)
58.950	7.520	1.670	47.1	50.4
169.660	0.240			50.4
38.550	8.050	1.670	47.1	46.0
81.540	6.550	1.699	30.1	46.0
25.500	11.410			36.0
	9.000			34.2
–28.990	2.360	1.603	38.0	34.0
81.540	12.130	1.658	57.3	40.0
–40.770	0.380			40.0
874.130	6.440	1.717	48.0	40.0
–79.460	72.228			40.0

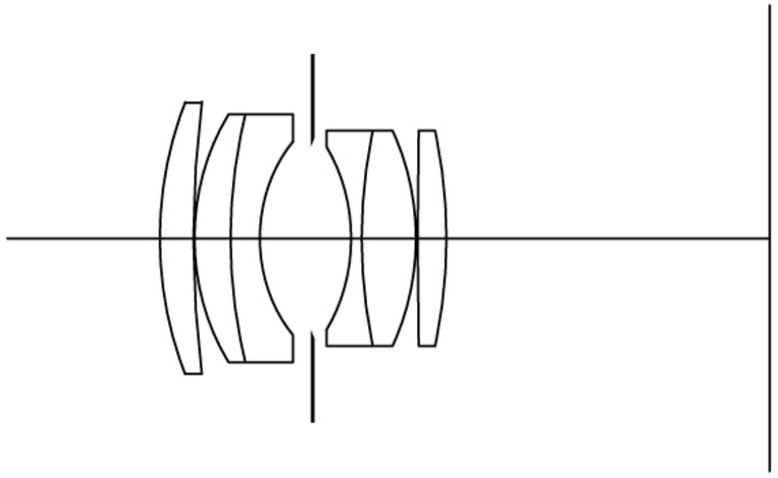

Ray Tracing Through Real Lens Designs

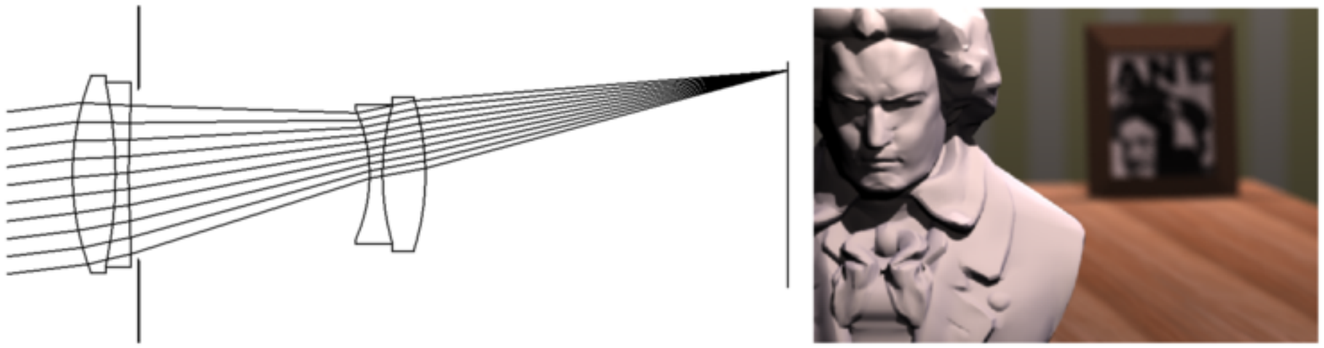

200 mm telephoto

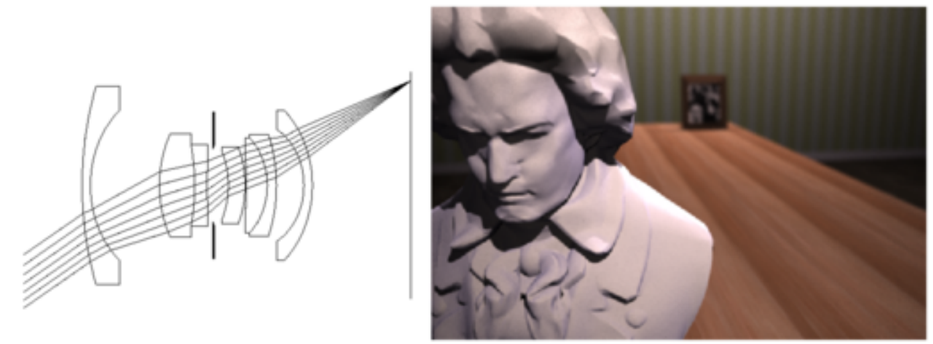

35 mm wide-angle

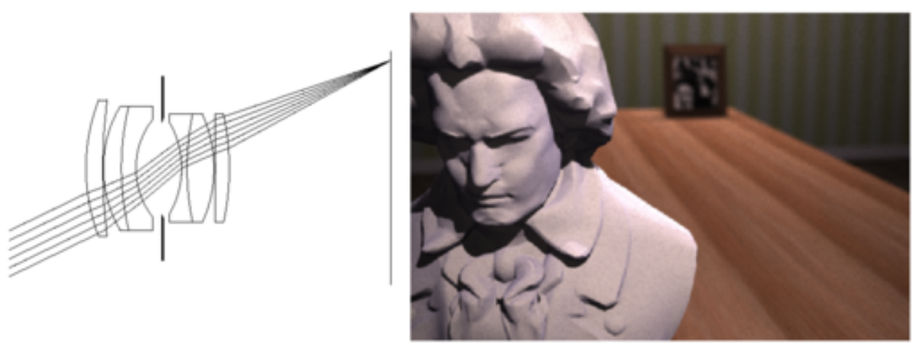

50 mm double-gauss

16 mm fisheye

From Kolb, Mitchell and Hanrahan (1995)

Ray Tracing Through Real Lens Designs

200 mm telephoto

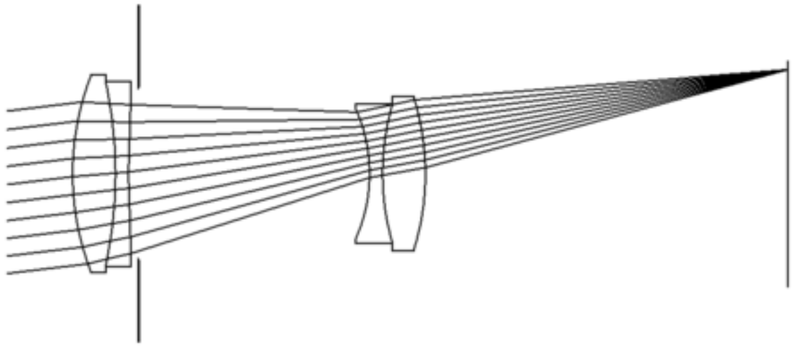

Notice shallow depth of field (out of focus background)

Ray Tracing Through Real Lens Designs

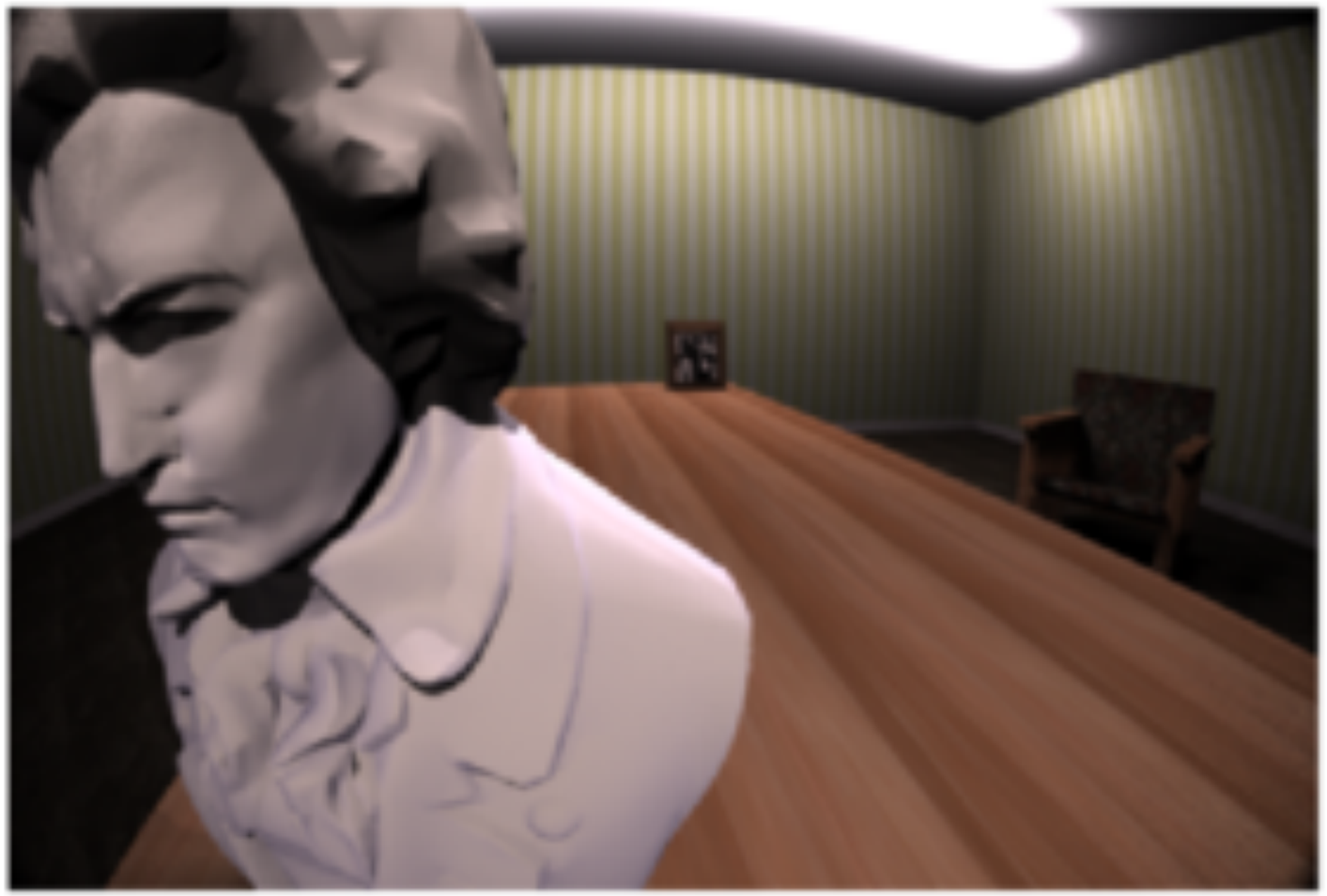

16 mm fisheye

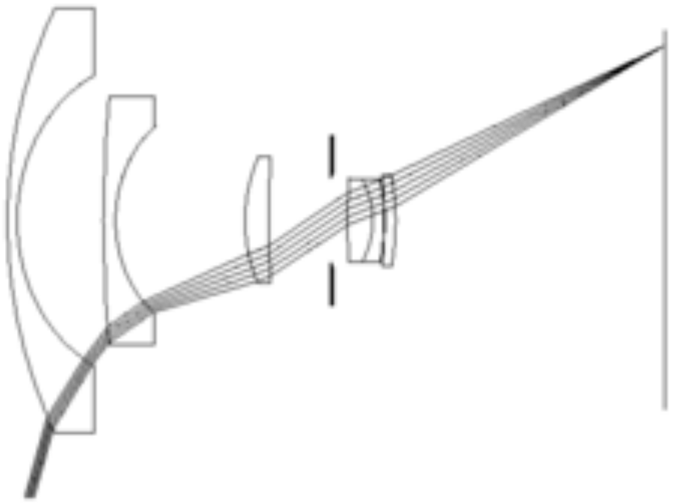

Notice distortion in the corners (straight lines become curved)

Ray Tracing Real Lens Designs

Monte Carlo approach

- At every sensor pixel, compute integral of rays incident on pixel area arriving from all paths through the lens

Algorithm (for a pixel)

- Choose N random positions in pixel
- For each position x′, choose a random position on the back element of the lens x″
- Trace a ray through from x′ to x″, trace refractions through lens elements until it misses the next element (kill ray) or exits the lens (path trace through the scene)
- Weight each ray according to radiometric calculation on next slide to estimate irradiance E(x′)

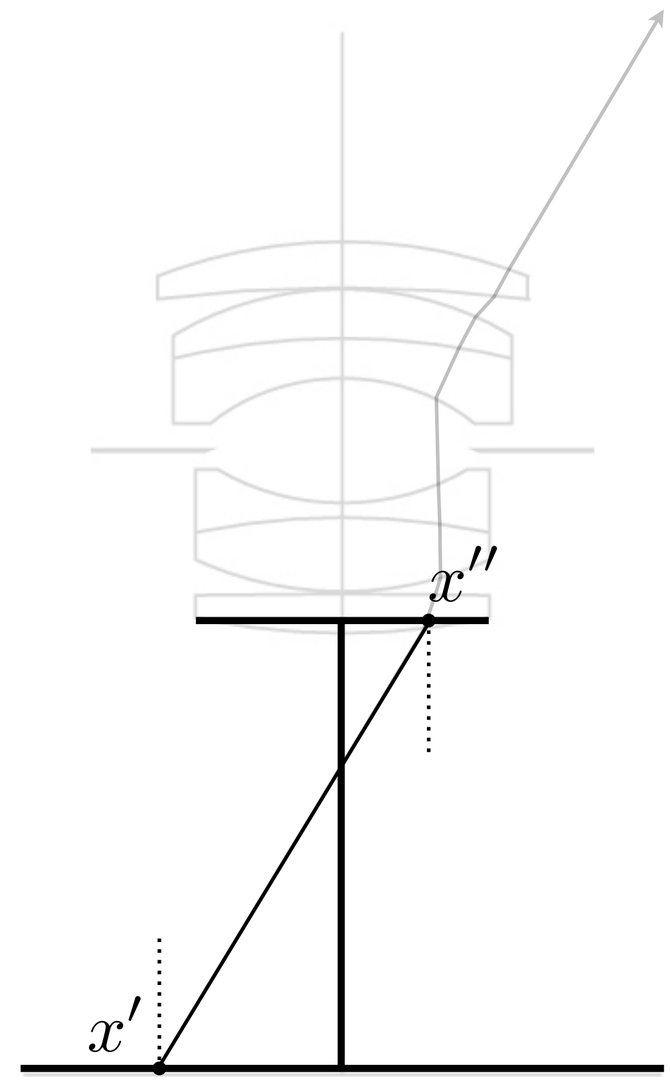

Radiometry for Tracing Lens Designs

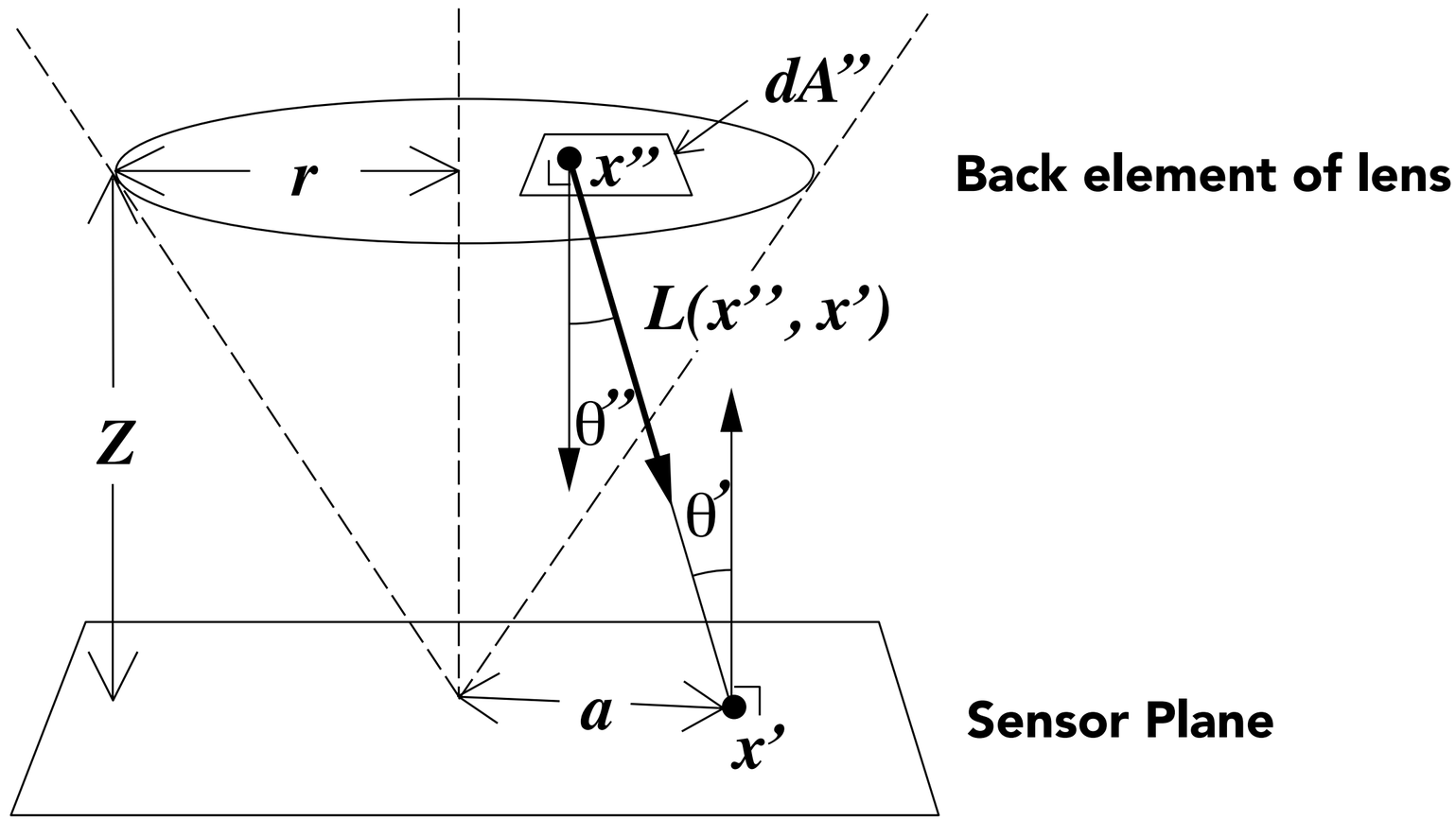

$$E(x') = \int_{x'' \in D} L(x'' \to x') \frac{\cos\theta' \cos\theta''}{||x'' - x'||^2} dA''$$

$$= \frac{1}{Z^2} \int_{x'' \in D} L(x'' \to x') \cos^4\theta dA''$$

Things to Remember

Effect	Cause
Field of view	Sensor size, focal length
Depth of field	Aperture, focal length, object dist.
Exposure	Aperture, shutter, ISO
Motion blur	Shutter
Grain/noise	ISO

Pinholes and lenses form perspective images

Perspective composition, dolly zoom

Acknowledgments

Many thanks to Marc Levoy, who created many of these slides, and Pat Hanrahan.

- London, Stone, and Upton, Photography (9th ed.), Prentice Hall, 2008.
- Peterson, Understanding Exposure, AMPHOTO 1990.
- The Slow Mo Guys
- bobatkins.com
- Hari Subramanyan
- Canon EF Lens Work III

Extra

Auto Focus

Contrast Detection Autofocus

A target object is imaged through the lens to an image patch on the sensor.

The contrast of this image patch is high if the object is in focus, low otherwise.

The physical focus of the lens is adjusted until the contrast of this image patch is maximized.

Many ways to estimate how in-focus the image patch is: gradient, Sum Modified Laplacian (Nayar), variance…

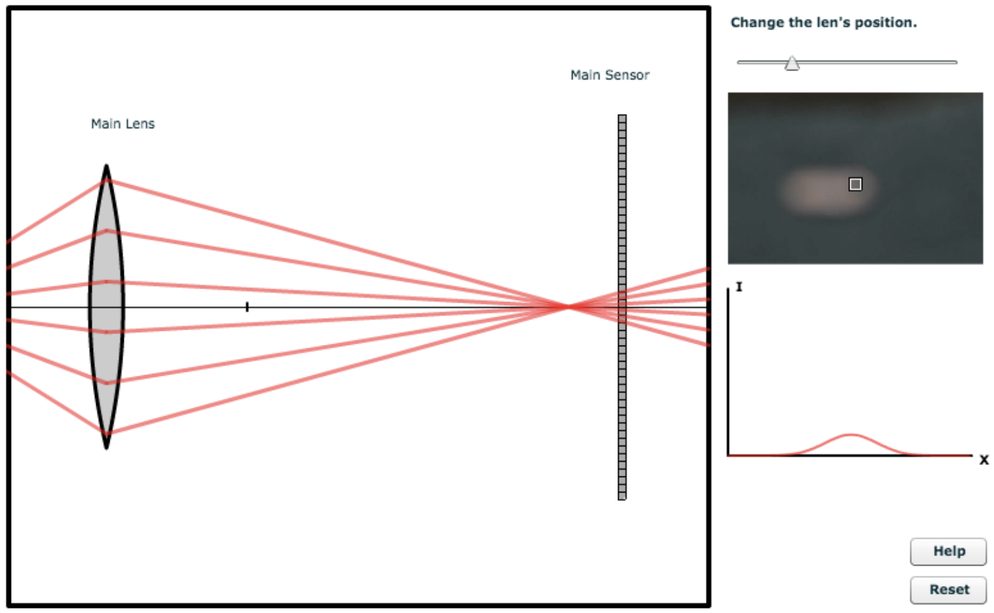

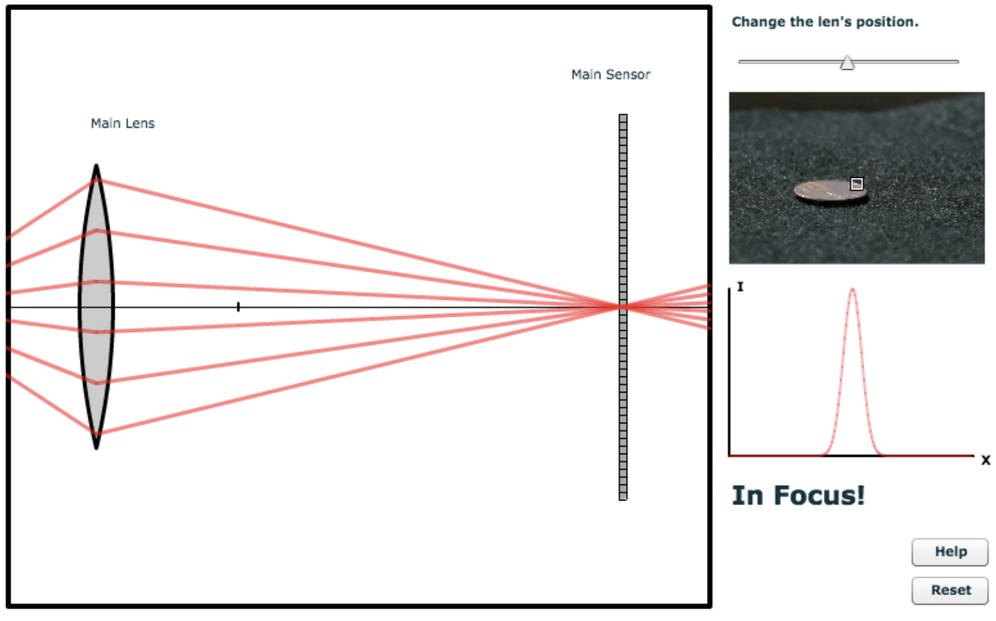

Demo (Levoy, Willet, Adams)

https://graphics.stanford.edu/courses/cs178-10/applets/autofocusCD.html

Phase Detection Autofocus

Ray bundles from a target object converge to points at different depths in the camera depending on the lens focus.

In a phase detection AF system ray bundles passing through different portions of the lens (red and green shown) are brought to focus on separate lenslets with separate AF sensors.

Depending on depth of focus point, the ray bundles converge to different positions on their respective AF sensors (see interactive demo).

A certain spacing (disparity) between these images is "in focus"

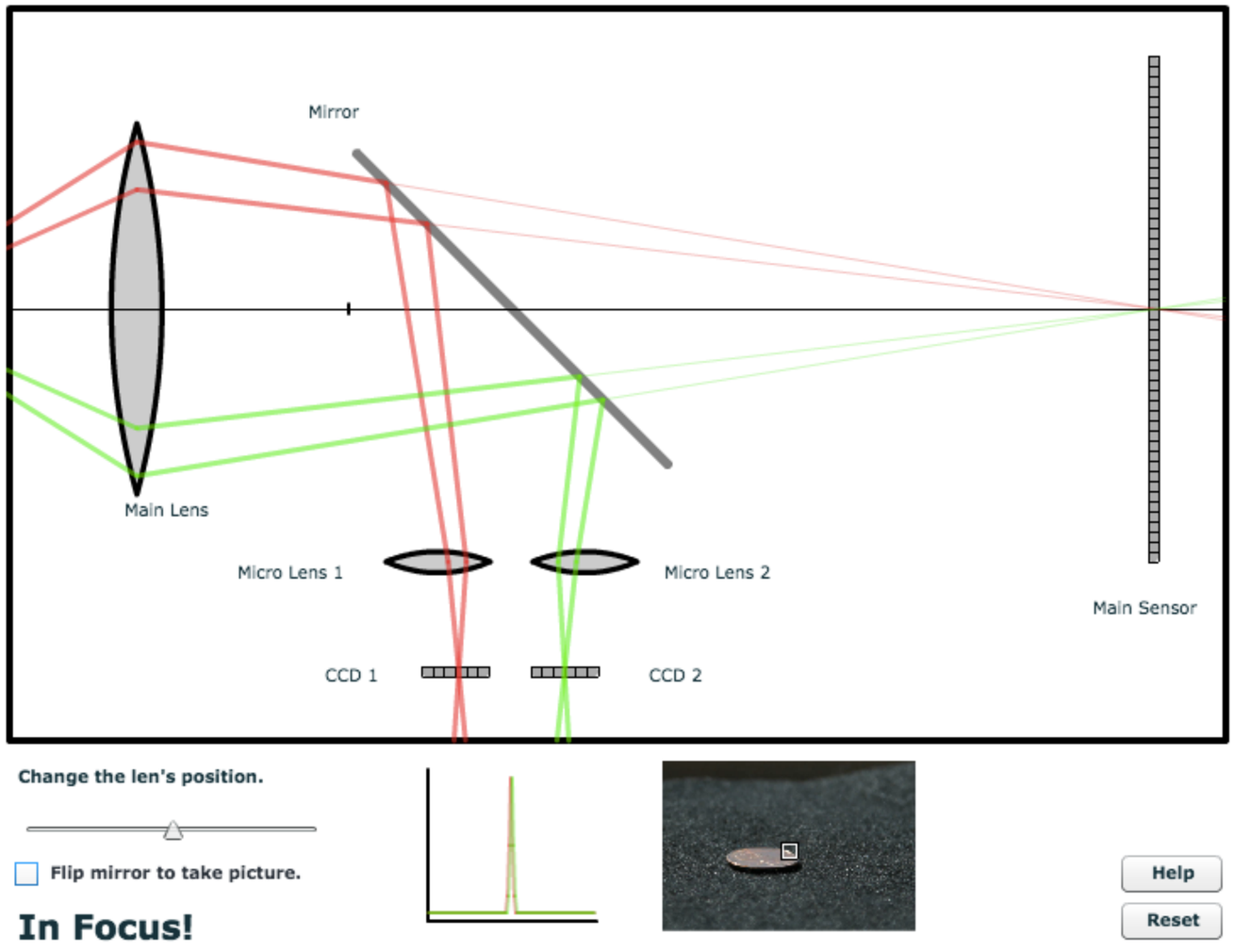

Demo (Levoy, Willet, Adams)

https://graphics.stanford.edu/courses/cs178-10/applets/autofocusPD.html

Phase Detection AF Used in DSLRs

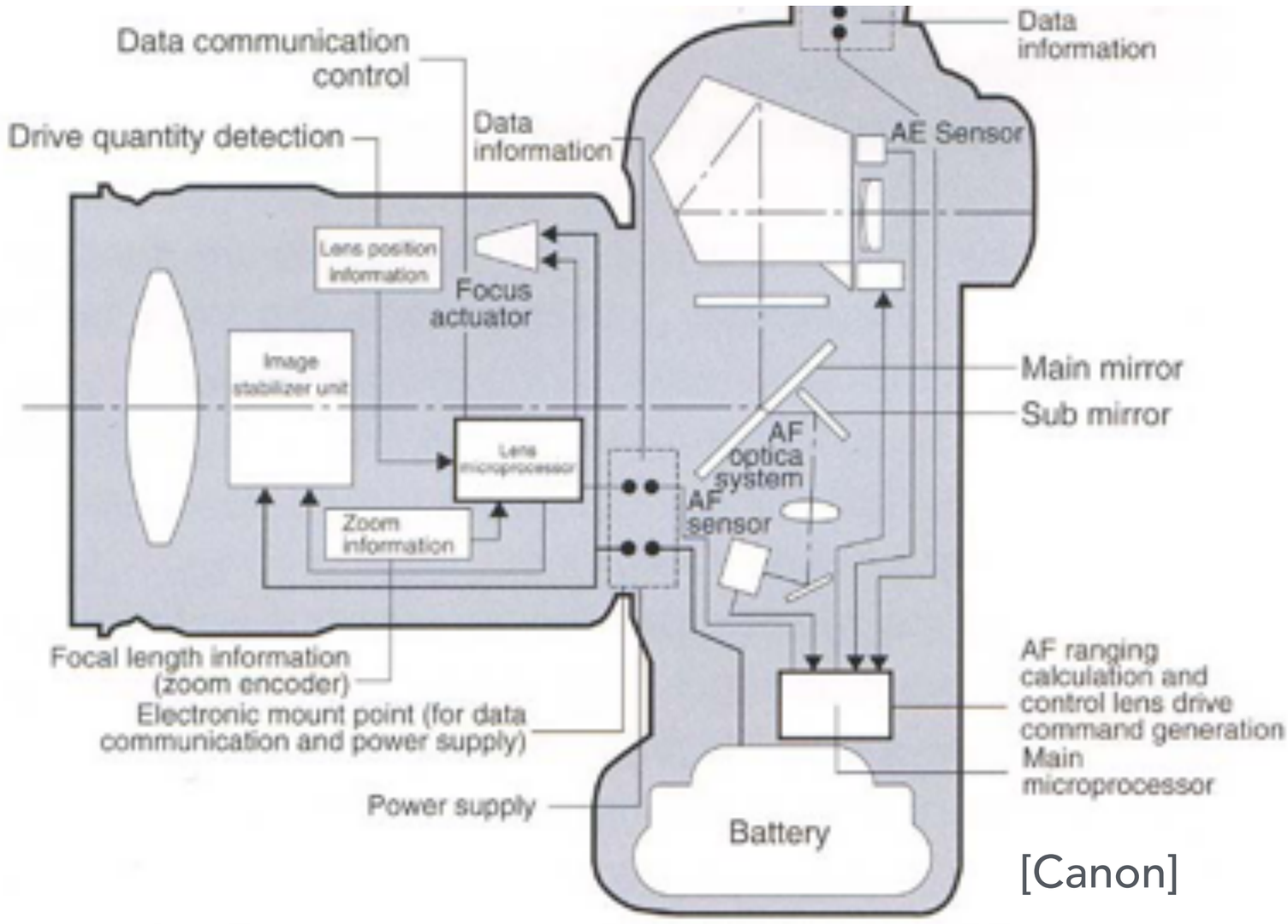

[Canon]

- Distance between phase-detect images correlates to distance in focus to target object (allows "jumping" to the right focus)
- Separate AF units cannot be used with "live view" or video recording

Phase Detection Pixels Embedded in Sensor

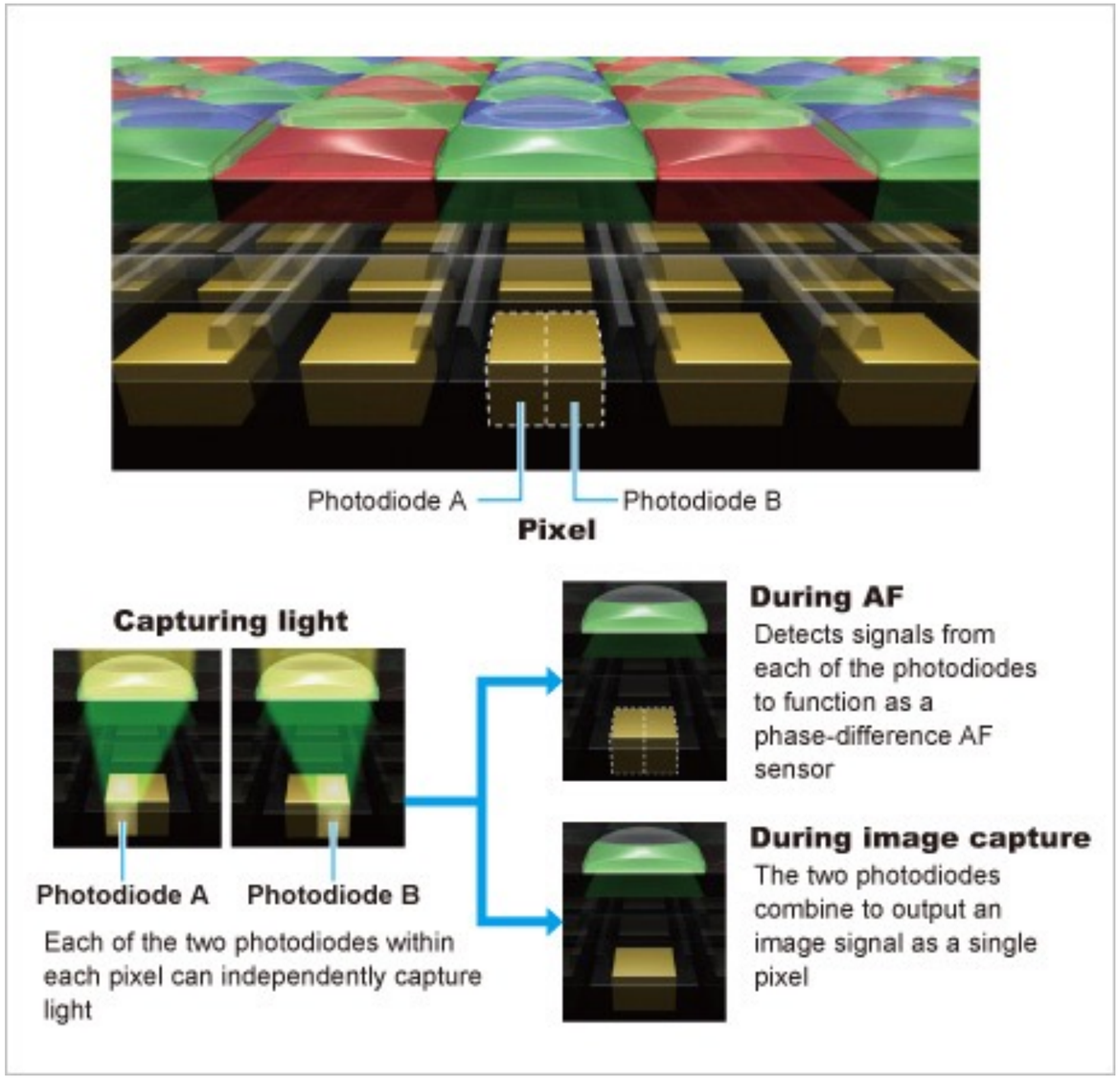

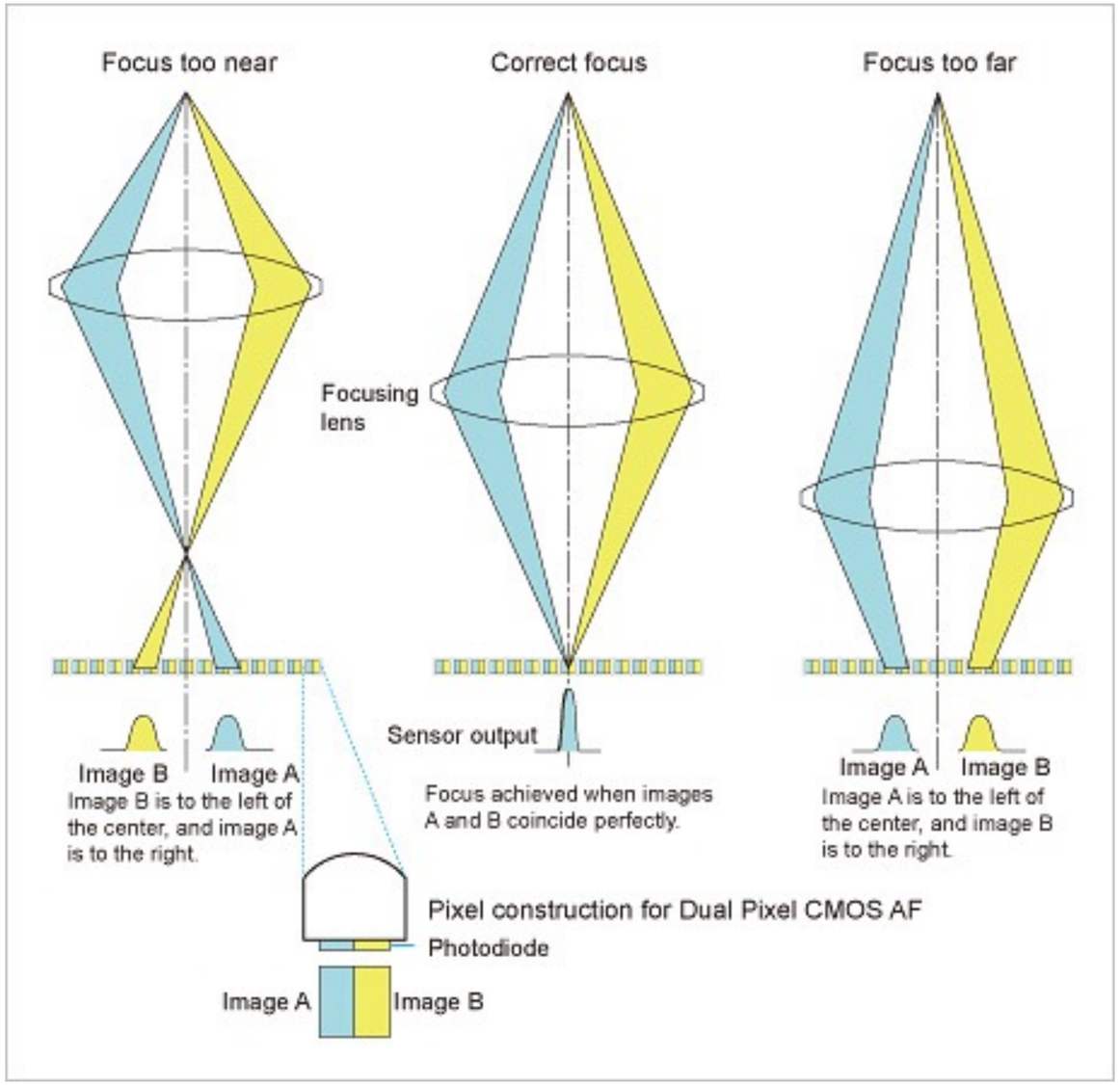

Canon

- Modern image sensors have small pixels, and may embed phase detection pixels directly into sensor image arrays